MODULE 6 : GENERAL WRENCHES AND TWISTS

CONTENTS

PART A : POINSOT'S THEOREM AND THE GENERAL WRENCH

PART B.- CHASLES'S THEOREM AND THE GENERAL TWIST

1.- Elementary velocity fields

2.- Reduction operations

- 2.1 Shifting of revolute joints
- 2.2 " " prismatic "
- 2.3 Combination of concurrent revolute joints
- 2.4 " " prismatic joints
- 2.5 Reduction to the origin
- 2.6 Reduction to the instantaneous screw axis

3.- The equivalent twist

- 3.1 Definition
- 3.2 Vector decomposition, pitch, and axis line
- 3.3 Extreme cases of the twist
  - Pure rotation
  - Pure translation
- 3.4 The helicoidal velocity field

4.- Rotations and translations as multiples of lines

PART C.- KINETOSTATICS OF SERIAL AND PARALLEL ROBOTS

1.- Static analysis of parallel robots

2.- Kinematic analysis of serial robots

3.- Additional relationships using virtual power

INTRODUCTION

The purpose of this module is to provide the necessary elements to confront the kinetostatic analysis of spatial serial and parallel robots

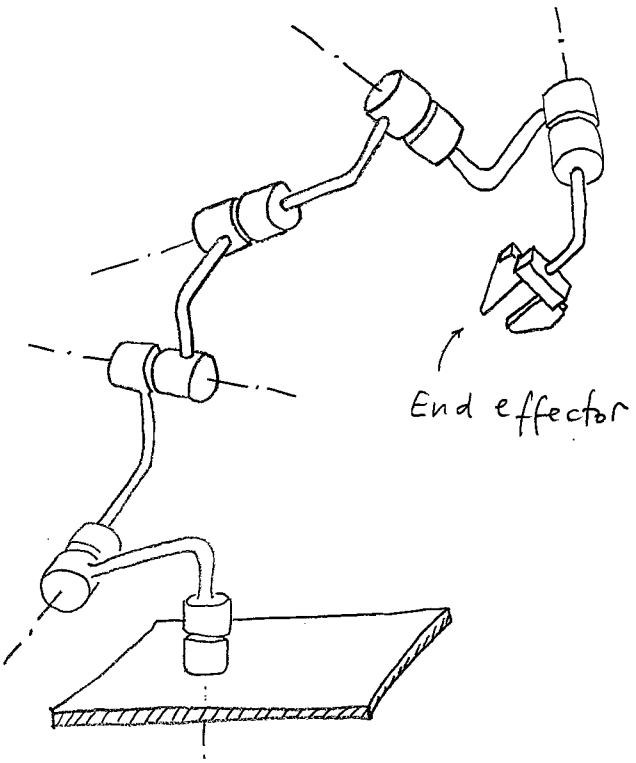

General 6R robot

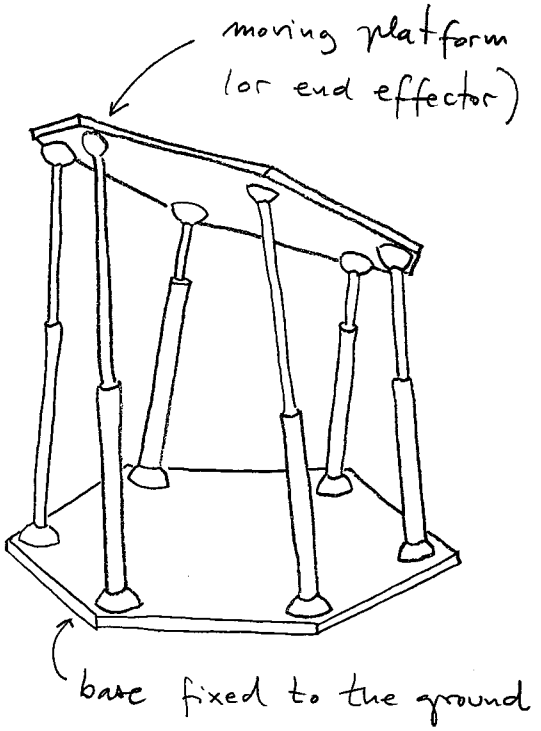

General parallel 6-UPS robot
(Stewart platform)

To this end, we first introduce the six-dimensional <u>screw vectors</u>, used to compactly describe

(a) The system of forces and couples acting on a rigid body.

(b) The velocity field of a moving body

The procedures that we will describe are basically geometric, and the proofs are very visual. We invite the reader to mentally construct and play with the dynamic images that we describe.

The whole development is motivated by two basic questions:

1 For a given rigid body like the one in fig. 1, subject to <u>the parallel action</u> of several forces $\vec{f}_1, \dots, \vec{f}_n$ and couples $\vec{c}_1, \dots, \vec{c}_m$, can we reduce this system of forces and couples to a single force applied on a line?

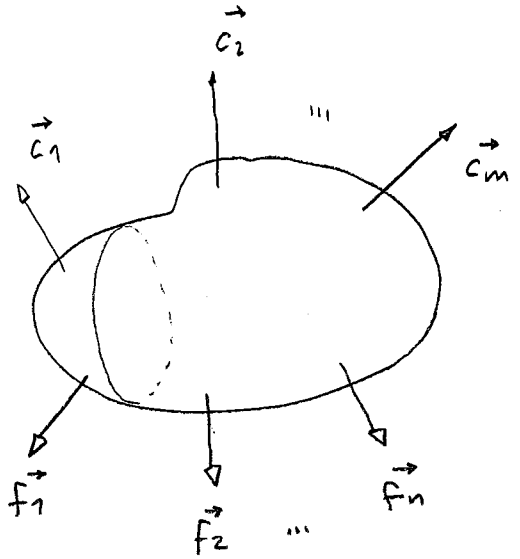

fig. 1

2 For a given chain of rigid bodies <u>connected in series</u> by means of revolute or prismatic joints (fig. 2), with relative angular velocities $\omega_1, \dots, \omega_n$, and linear velocities $v_1, \dots, v_m$, respectively, can we substitute such a chain by a single joint that induces the same velocity field over the end body?

The answer to the two questions is given by Poinsot's and Chasles's theorems, respectively.

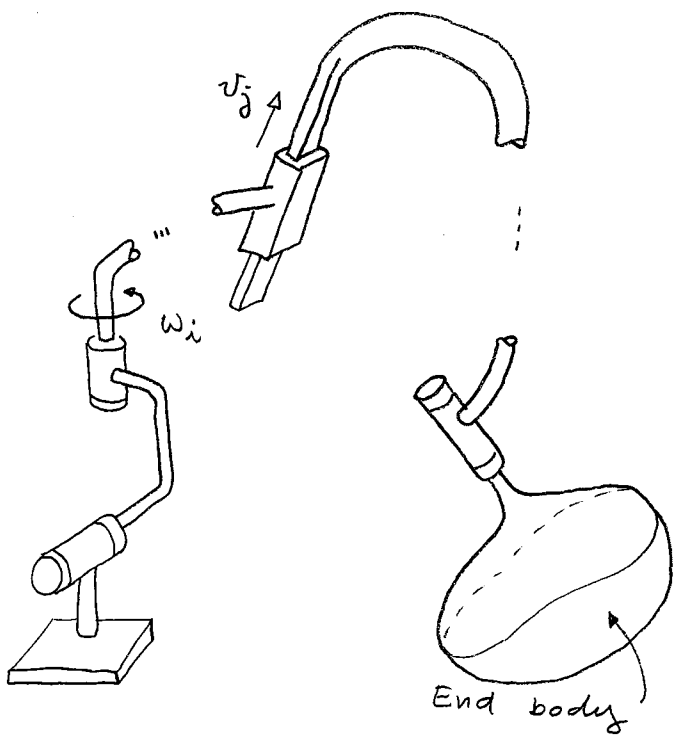

fig. 2

PART A POINSOT'S THEOREM AND THE GENERAL WRENCH

1. THE AXIOMS OF STATICS

The statics of rigid bodies is based on a series of axioms that can be verified experimentally. Besides the principle of action-reaction, the axioms of Statics can be summarised into two main principles, called the principle of equilibrium and the principle of equivalence

1.1 THE PRINCIPLE OF EQUILIBRIUM

The principle reads as follows:

> A body is in equilibrium (i.e., its acceleration is null) if, and only if, the system of forces acting on it has a null resultant, and the moment of such forces relative to the origin O is null.

We remind the following facts from elementary Mechanics:

(1) If $\vec{f}_1, \dots, \vec{f}_n$ is the system of forces acting on a rigid body, then its resultant is $\vec{f}_r = \sum_{i=1}^{n} \vec{f}_i$.

(2) If $\vec{f}_i$ is a force acting on a line $\mathcal{L}$ with position vector $\vec{r}_i = \vec{OP}_i$ (fig. 3), the moment of $\vec{f}_i$ relative to O is $\vec{m}_i = \vec{r}_i \times \vec{f}_i = \vec{OP}_i \times \vec{f}_i$. It is important to note that $\vec{m}_i = \vec{f}_i \times \vec{P_iO}$ as well, and, in fact, in many points of these notes we will prefer this latter form, because it better stresses the analogies of the wrench with the twist (see part B). Note that it is generally accepted that the velocity vector of a point is $\vec{\omega} \times \vec{r}$, where $\vec{r}$ is directed from the axis of $\vec{\omega}$ to the point.

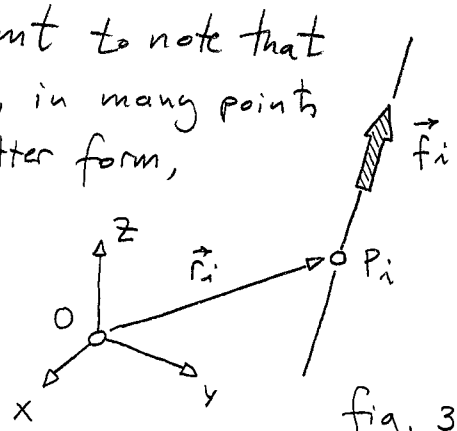

fig. 3

(3) The resultant moment of $\vec{f}_1, \dots, \vec{f}_n$ relative to O is

$$\vec{m}_r = \sum_{i=1}^{m} \vec{m}_i$$

(4) We have assumed that the body is acted on by forces only, not couples, but this is not a loss of generality because a couple is a system of two antiparallel forces (see Appendix 1, on page 29).

(5) The position of the origin O is irrelevant when verifying the equilibrium conditions, because if the sum of forces is null, and the sum of moments of these forces is also null relative to O, then it will also be null relative to some other point O', as the following proof shows.

<u>Proof</u>:-

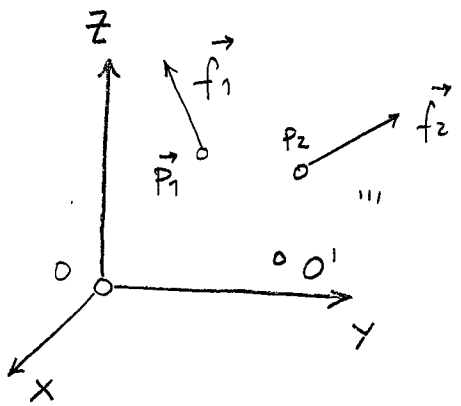

fig. 4

We know that

$$\sum \vec{f_i} = 0 \qquad (\mathrm{I})$$

$$\sum \vec{OP_i} \times \vec{f_i} = 0 \qquad (\mathrm{II})$$

Then

$$\sum \vec{O'P_i} \times \vec{f_i} = \sum (\vec{O'O} + \vec{OP_i}) \times \vec{f_i}$$

$$= \sum \vec{O'O} \times \vec{f_i} + \underbrace{\sum \vec{OP_i} \times \vec{f_i}}_{\substack{= \\ 0 \text{ by (II)}}} =$$

$$= \vec{O'O} \times \underbrace{\sum \vec{f_i}}_{\substack{= \\ 0 \text{ by (I)}}} = 0$$

1.2.- THE PRINCIPLE OF EQUIVALENCE

The principle of equivalence can be stated as follows:

> Two force systems are mecanically equivalent (they produce the same effect on the movement of a rigid body) if they have the same resultant force, and the same resultant moment with respect to any given point (for example the origin of the reference frame).

Example.- Three tugboats are applying the following forces to the larger boat of fig. 5

$$\vec{f_1} = \begin{bmatrix} 0 \\ 1 \\ 0 \end{bmatrix} N \qquad \vec{f_2} = \begin{bmatrix} 0 \\ 1 \\ 0 \end{bmatrix} N \qquad \vec{f_3} = \begin{bmatrix} 0 \\ -1 \\ 0 \end{bmatrix} N,$$

at points A, B, and C, respectively. It can be shown that the effect of the three tugboats is equivalent to that of a single tugboat applying a force $\vec{f_4} = \begin{bmatrix} 0 \\ 1 \\ 0 \end{bmatrix} N$ at point D

$A = (1,2)$
$B = (3,2)$
$C = (2,3)$
$D = (2,2)$

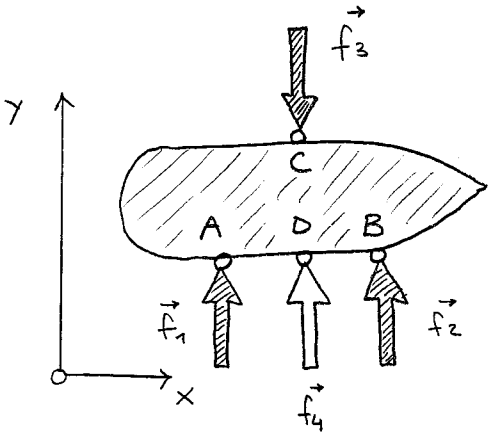

fig. 5

Certainly, on the one hand

$$\vec{f_1} + \vec{f_2} + \vec{f_3} = \begin{bmatrix} 0 \\ 7 \\ 0 \end{bmatrix} = \vec{f_4} \qquad \text{(Same resultant force)}$$

and, on the other hand,

$$\vec{OA} \times \vec{f_1} + \vec{OB} \times \vec{f_2} + \vec{OC} \times \vec{f_3} =$$

$$\begin{bmatrix} 0 \\ 0 \\ 7 \end{bmatrix} + \begin{bmatrix} 0 \\ 0 \\ 3 \end{bmatrix} + \begin{bmatrix} 0 \\ 0 \\ -2 \end{bmatrix} = \begin{bmatrix} 0 \\ 0 \\ 2 \end{bmatrix} \text{Nm}$$

$$\vec{OD} \times \vec{f_4} = \begin{bmatrix} 0 \\ 0 \\ 2 \end{bmatrix} \text{Nm}$$

(Same resultant moment)

End of example

We next show that the principle of equivalence gives rise to a number of geometric operations that, if combined, allow to reduce a system of forces and couples (acting on a rigid body) to a new simpler system with just one force and a couple.

To those readers less familiarized with the concept of couple, we recommend studying Appendix 1 before proceeding (page 29).

2.- REDUCTION OPERATIONS

2.1 SHIFTING OF FORCES

Shifting along the action line

Clearly, a force vector can be thought of as applied on any point of the action line of the force, without affecting neither the resultant force, nor the resultant moment

with respect to the origin. Note from fig. 6 that the moment of $\vec{f}$ with respect to O is the same irrespectively of whether $\vec{f}$ is applied in B or in A, because

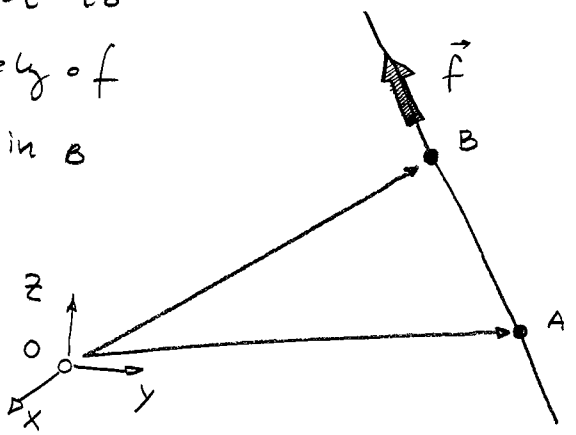

fig. 6

$$\vec{m} = \vec{OB} \times \vec{f} = (\vec{OA} + \vec{AB}) \times \vec{f} = (\vec{OA} \times \vec{f}) + \underbrace{(\vec{AB} \times \vec{f})}_{=0} = \vec{OA} \times \vec{f}$$

Shifting parallel to the action line

Let $\vec{f}$ be a force applied to point A of a rigid body. If we wish, we can shift $\vec{f}$ laterally (parallel to itself) and apply it to a new, arbitrary point B.

However, in order for the new force system to be equivalent to the previous, we must add a compensating couple (of moment) $\vec{c}_B = \vec{f} \times \vec{r}$, where $\vec{r} = \vec{AB}$ (fig. 7).

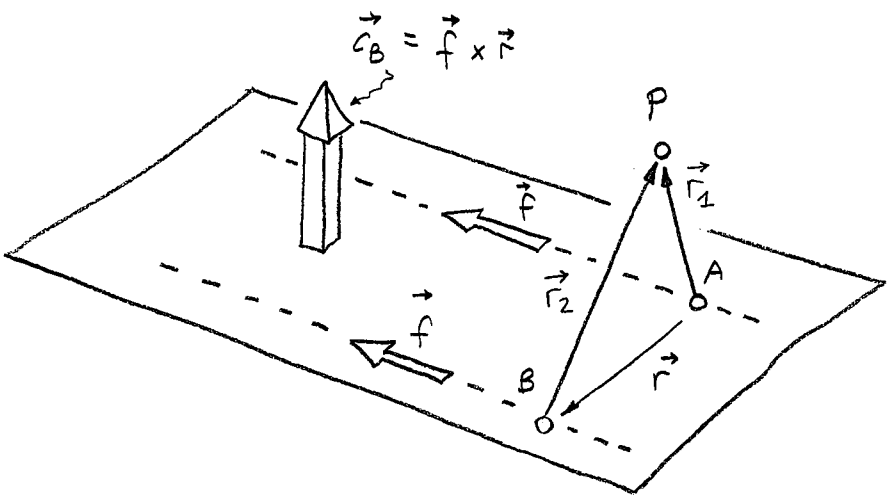

fig 7. Addition of a compensating couple c_B when shifting a force out of its action line

Note that the two force systems

- Old one : $\vec{f}$ applied in A
- New one : $\vec{f}$ " " B, plus $\vec{c}_B$

have the same resultant force $\vec{f}$ and moment $\vec{m}_P$ with respect to any point P :

- Old system :

$$\vec{m}_P = \vec{f} \times \vec{r}_1$$

- New system :

$$\vec{m}_P = \vec{f} \times \vec{r}_2 + \vec{c}_B = \vec{f} \times \vec{r}_2 + \vec{f} \times \vec{r} =$$
$$= \vec{f} \times (\vec{r}_2 + \vec{r}) = \vec{f} \times \vec{r}_1$$

NOTE : A faster way to see the equivalence is by taking moments w.r.t. B, but using P keeps better the analogies wrt Part B

2.2 SHIFTING OF COUPLES

According to appendix 1 (page 29), a couple does not have a specific line of action. It is a free vector. The two forces forming a couple can be seen as applied anywhere on the body (as long as their resultant moment stays constant) and the effect on the body motion will be the same.

2.3 SUM OF CONCURRENT FORCES

Two forces $\vec{f}_1$ and $\vec{f}_2$ acting along concurrent lines (i.e., intersecting lines) can be substituted by a single force $\vec{f} = \vec{f}_1 + \vec{f}_2$ applied at the point P of intersection of the lines (fig. 8).

We can clearly perform such a substitution because the two systems

- Old : $\vec{f_1}$ and $\vec{f_2}$
- New : $\vec{f} = \vec{f_1} + \vec{f_2}$

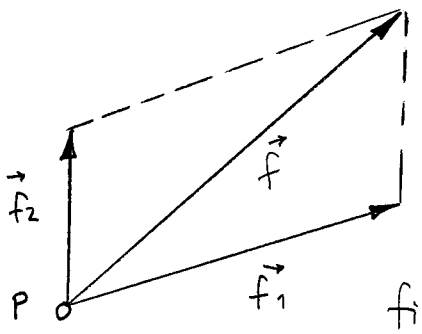

fig. 8

have the same resultant force, and the same resultant moment with respect to the origin. This is the well-known "rule of the parallelogram".

2.4.- SUM OF COUPLES

Two couples (of moments) $\vec{c_1}$ and $\vec{c_2}$ can be substituted by a single couple (of moment) $\vec{c} = \vec{c_1} + \vec{c_2}$ because the two systems have the same resultant force (the <u>zero</u> force) and the same resultant moment with respect to the origin ($\vec{c_1} + \vec{c_2}$).

<u>OBSERVATION</u>: Note that, certainly, the resultant moment $\vec{m}$ of two couples $\vec{c_1}$ and $\vec{c_2}$ is $\vec{c_1} + \vec{c_2}$. From fig. 9 we see that

$$\vec{m} = \underbrace{\vec{f_1} \times \vec{r_1}}_{\vec{c_1}} + \underbrace{\vec{f_2} \times \vec{r_2}}_{\vec{c_2}} =$$

$$= \vec{c_1} + \vec{c_2}$$

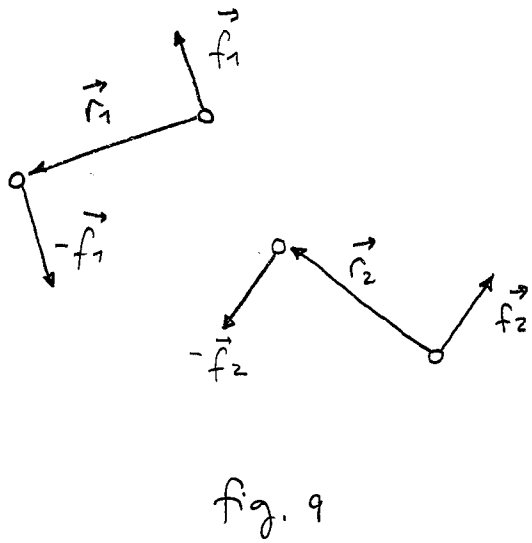

fig. 9

2.5: REDUCTION TO THE ORIGIN

With the operations of shifting and sum of forces and couples (Sections 2.1 - 2.4) we can now reduce any system of forces $\vec{f}_1, \dots, \vec{f}_n$ and couples $\vec{c}_1, \dots, \vec{c}_m$ acting on a rigid body, to a single force $\vec{f}$ applied at the reference frame origin O, plus a single couple $\vec{c}_0$.

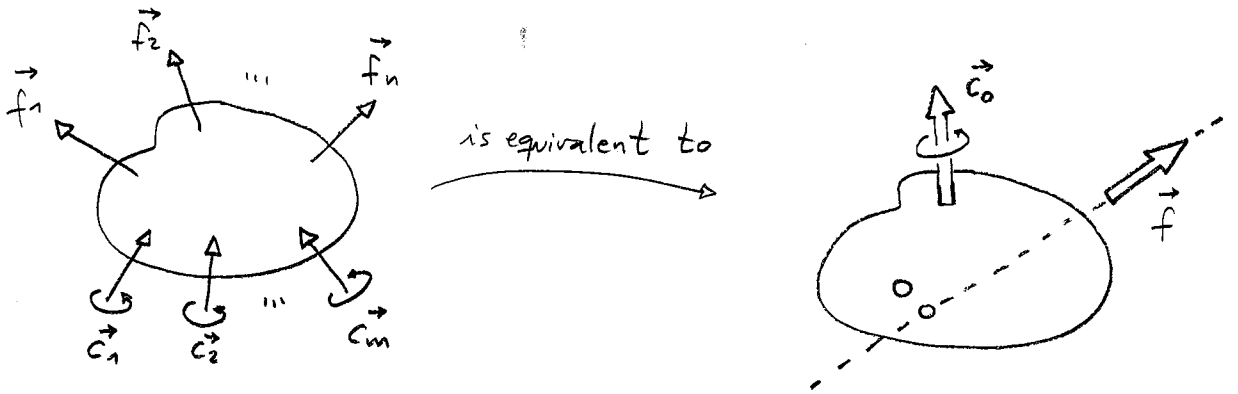

fig. 10

Being a free vector, the couple $\vec{c}_0$ can be seen as applied to any point of the body. The reduction is done as follows:

(1) We translate all forces to the origin, using the shifting operation (Section 2.1). For each force $\vec{f}_i$ this entails adding a compensating couple $\vec{c}_{0,i} = \vec{f}_i \times \overrightarrow{P_i O}$, where P_i is any point on the action line of $\vec{f}_i$.

(2) We perform the sum $\vec{f} = \vec{f}_1 + \dots + \vec{f}_n$ by applying the operation of sum of concurrent forces (Section 2.3).

(3) We add up all couples, including the compensating ones, using the operation of sum of couples (Section 2.4), obtaining $\vec{c}_0$. That is: $\vec{c}_0 = \vec{c}_1 + \dots + \vec{c}_m + \vec{c}_{0,1} + \dots + \vec{c}_{0,n}$.

Note that the previous process can be used to reduce the original forces and couples to <u>any</u> other point in 3-space as well.

2.6 REDUCTION TO THE CENTRAL AXIS

Once the original system of forces and couples has been reduced to the origin, we have the situation of fig. 11. We have a single force $\vec{f}$ and a single couple $\vec{c}_o$ acting on the body. Without loss of generality, we can assume that $\vec{f}$ is acting on the z axis, and that $\vec{c}_o$ is a vector of the YZ plane, because we can always choose such an appropriate reference frame.

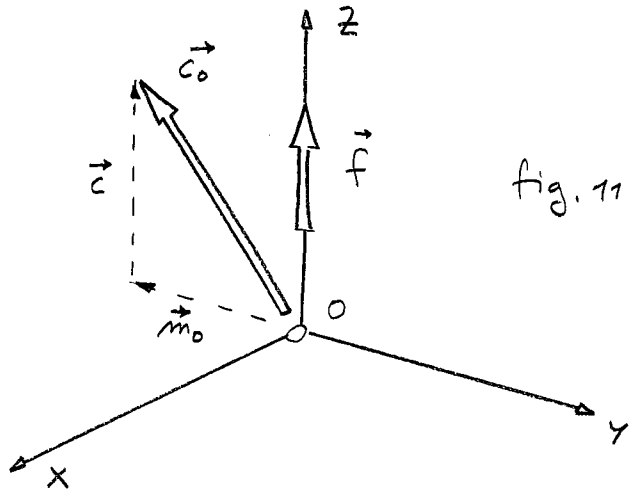

fig. 11

Let $\vec{m}_o$ and $\vec{c}$ be the projections of $\vec{c}_o$ on the Y and Z axes, respectively. We now wonder whether it would be possible to find a point A in 3-space such that, by reducing the force system $\{\vec{f}, \vec{c}_o\}$ to A, then the resultant couple is parallel to $\vec{f}$. In other words, can we shift $\vec{f}$ to another action line $\$_A$ parallel to the z axis, and through a new point A, such that the compensating couple introduced is able to cancel the $\vec{m}_o$ component of $\vec{c}_o$?

Yes we can! Note that if we shift the point of application of $\vec{f}$ along the X axis, we will necessarily find a point A on this axis for which

the compensating couple $\vec{c}_A$ introduced due to the shifting will totally cancel the $\vec{m}_o$ component of $\vec{c}_o$, as shown in fig. 12 :

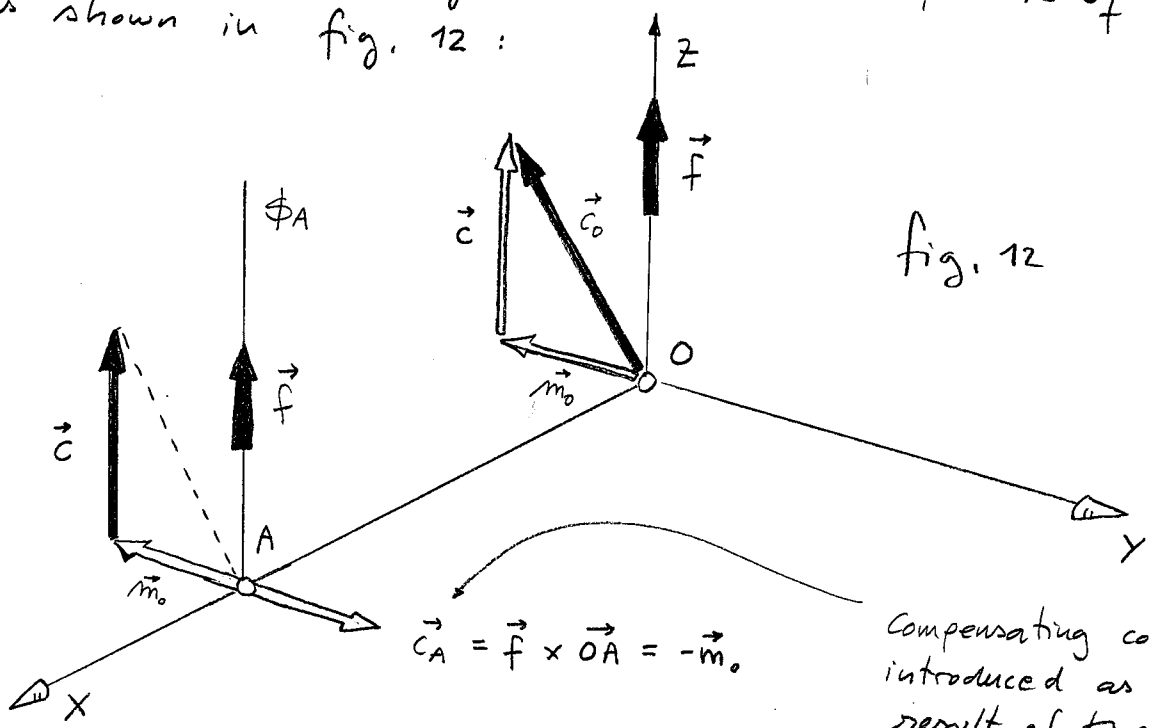

fig. 12

Clearly, there exists a point A such that $\vec{c}_A = \vec{f} \times \vec{OA} = -\vec{m}_o$ and, thus, the original system $\{\vec{f}, \vec{c}_o\}$, with $\vec{f}$ applied along the z axis, can be reduced to the equivalent system $\{\vec{f}, \vec{c}\}$, with $\vec{f}$ applied along $\$_A$.

The special line $\$_A$ where $\vec{f}$ and $\vec{c}$ are parallel is called the central axis, and its existence was first established by Louis Poinsot (1777 - 1859). This result is known as Poinsot's Central Axis Theorem.

Notice that the central axis is <u>unique</u>. We cannot find a different point A in which the resultant force and the resultant couple are parallel, except the points along the same line $\$_A$. Certainly, if we try to reduce the force system $\{\vec{f}, \vec{c}\}$, with $\vec{f}$ applied along $\$_A$, to another point B of the XY plane, then we necessarily have to add a new compensating couple $\vec{c}_B$, parallel to the XY plane. Thus, the final resultant couple will no longer be aligned with $\vec{f}$, as we see in fig. 13:

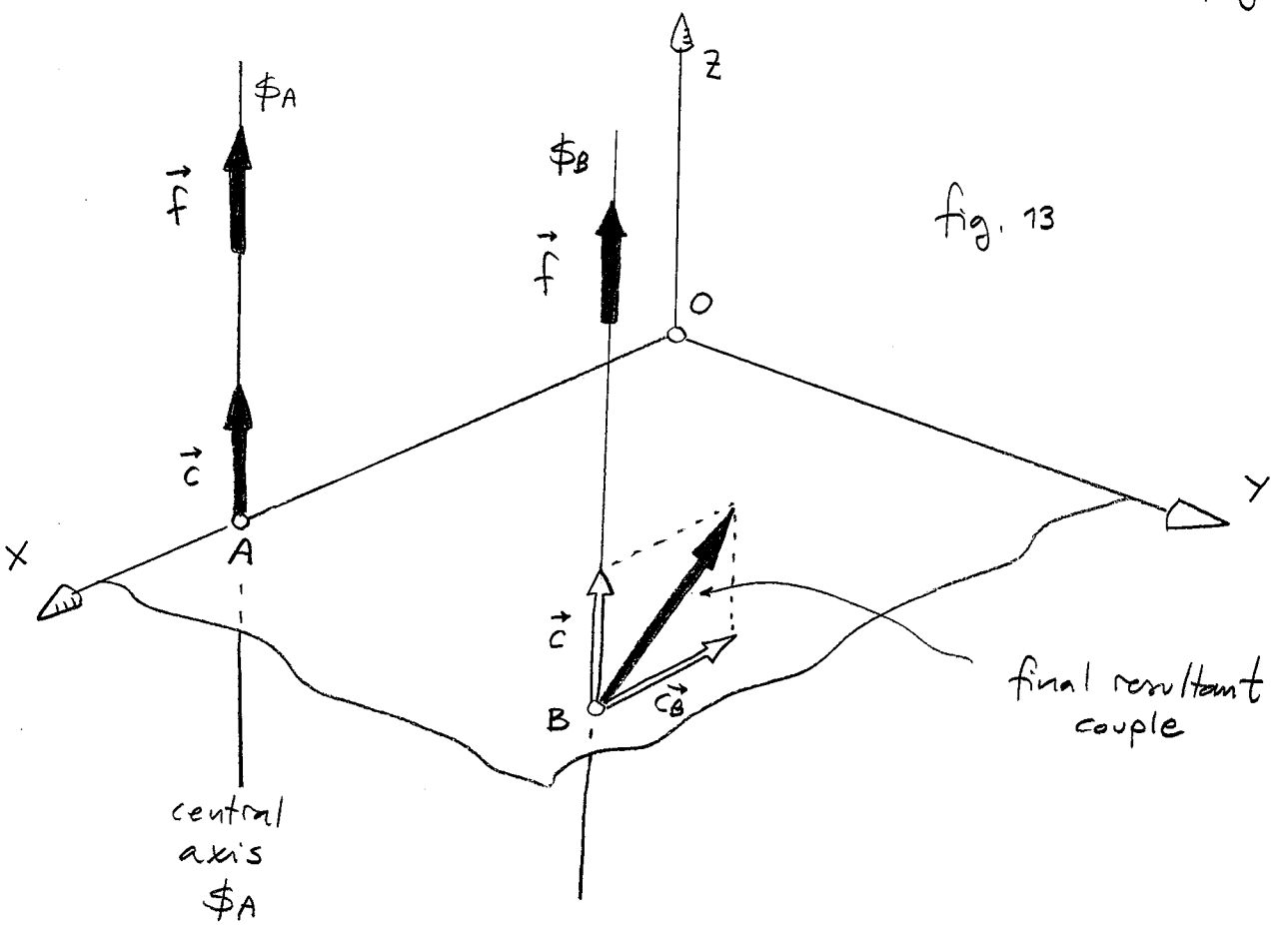

fig. 13

A consequence of the previous reasoning is that the central axis is the line in which the reduced system has a couple $\vec{c}$ of minimum norm. This property may be useful in applications in which it is necessary to equilibrate an external system of forces with an actuator having the narrowest range of deliverable couples.

3.- THE RESULTANT WRENCH

3.1 DEFINITION

The six-component vector $\hat{w} = \begin{bmatrix} \vec{f} \\ \vec{c}_0 \end{bmatrix}$ is called the resultant wrench of the original system of forces $\vec{f}_1, \dots, \vec{f}_n$ and couples $\vec{c}_1, \dots, \vec{c}_m$ (fig. 10).

OBSERVATION: Note that although in figures 11, 12, and 13 we have used a particular reference frame, the wrench $\hat{w} = \begin{bmatrix} \vec{f} \\ \vec{c}_0 \end{bmatrix}$ can be given in an arbitrary frame ■

From the reasoning of fig. 12 we infer that the six components of the wrench $\hat{w} = \begin{bmatrix} \vec{f} \\ \vec{c}_0 \end{bmatrix}$ determine the line $\$_A$ and the vectors $\vec{f}$ and $\vec{c}$. Since $\vec{f}$ and $\vec{c}$ are parallel, we can write

$$\vec{c} = h \cdot \vec{f},$$

where h is a signed scalar. Thus we can say that

$\hat{w}$ determines a vector $\vec{f}$ sliding along a line $\$_A$, together with the scalar h.

Geometrically, the pair formed by a sliding vector and a scalar is called a <u>screw</u>. The scalar h is called <u>the pitch</u> of the screw. Whereas a screw is the underlying geometric entity, the wrench is its physical interpretation. We will soon see that a <u>screw</u> also has a physical interpretation in kinematics.

3.2 VECTOR DECOMPOSITION OF A WRENCH

We next see that, from a given wrench $\vec{w} = \begin{bmatrix} \vec{f} \\ \vec{c}_o \end{bmatrix}$ we can rapidly infer its pitch h, and the action line $\$_A$ (Poinsot's central axis).

Computing the pitch h

Let $c = h \cdot |\vec{f}|$. Clearly, c is the signed projection of $\vec{c}_o$ on the direction defined by $\vec{f}$. Therefore we can write

$$c = \vec{c}_o^{\,T} \cdot \frac{\vec{f}}{|\vec{f}|},$$

i.e.,

$$h \cdot |\vec{f}| = \vec{c}_o^{\,T} \cdot \frac{\vec{f}}{|\vec{f}|}$$

from which we obtain

$$\boxed{h = \frac{\vec{f}^{\,T} \cdot \vec{c}_o}{|\vec{f}|^2} \qquad (F1)}$$

This expression provides the pitch h as a function of the components $\vec{f}$ and $\vec{c}_o$ of the wrench $\hat{w}$.

From fig. 12 we know that

$$\vec{c}_o = \vec{m}_o + \vec{c}$$

where

$$\vec{m}_o = -\vec{c}_A = \vec{f} \times \vec{r}$$

and $\vec{r} = \vec{AO}$. Hence, once we know h, we can obtain $\vec{c} = h \cdot \vec{f}$ and $\vec{m}_o = \vec{c}_o - \vec{c}$, and we can decompose the wrench as follows

$$\hat{w} = \begin{bmatrix} \vec{f} \\ \vec{c}_o \end{bmatrix} = \begin{bmatrix} \vec{f} \\ \vec{m}_o \end{bmatrix} + \begin{bmatrix} \vec{0} \\ \vec{c} \end{bmatrix} = \begin{bmatrix} \vec{f} \\ \vec{f} \times \vec{r} \end{bmatrix} + \begin{bmatrix} 0 \\ h\vec{f} \end{bmatrix}$$

Note that a spatial wrench is more general than a planar wrench. In planar statics all wrenches were adopting the form $\begin{bmatrix} \vec{f} \\ \vec{f} \times \vec{r} \end{bmatrix}$, whereas we now have the added term $\begin{bmatrix} 0 \\ h\vec{f} \end{bmatrix}$.

Computing the central axis line $\$_A$

Once we know h, the vector $\begin{bmatrix} \vec{f} \\ \vec{m}_o \end{bmatrix}$ is totally determined, because

$$\vec{m}_o = \vec{c}_o - h \cdot \vec{f}$$

It is easy to see that $\begin{bmatrix} \vec{f} \\ \vec{m}_o \end{bmatrix}$ uniquely determines the line $\$_A$. The first three components ($\vec{f}$) provide the direction vector of the line. The last three ($\vec{m}_o$) determine the position of the line. Certainly, from the analysis of fig. 12 we see that there is only <u>one</u> line of 3-space with a direction vector $\vec{f}$ whose moment with respect to the origin is $\vec{m}_o$, and that this is precisely the line of the central axis.

Since we already know the direction vector $\vec{f}$ of $\$_A$, we only need to obtain a point of $\$_A$ in order to write the vector equation of this line. We next see how to compute the point A of $\$_A$ at a minimum distance from the origin O. We will denote by $\vec{r}_A$ the position vector of this point.

Without resorting to any particular reference frame, we have the situation of fig. 14, analogous to fig. 12, where the vectors $\vec{f}$, $\vec{r} = \vec{AO}$, and $\vec{m}_o$ are pairwise orthogonal, and $\vec{m}_o = \vec{f} \times \vec{r}$.

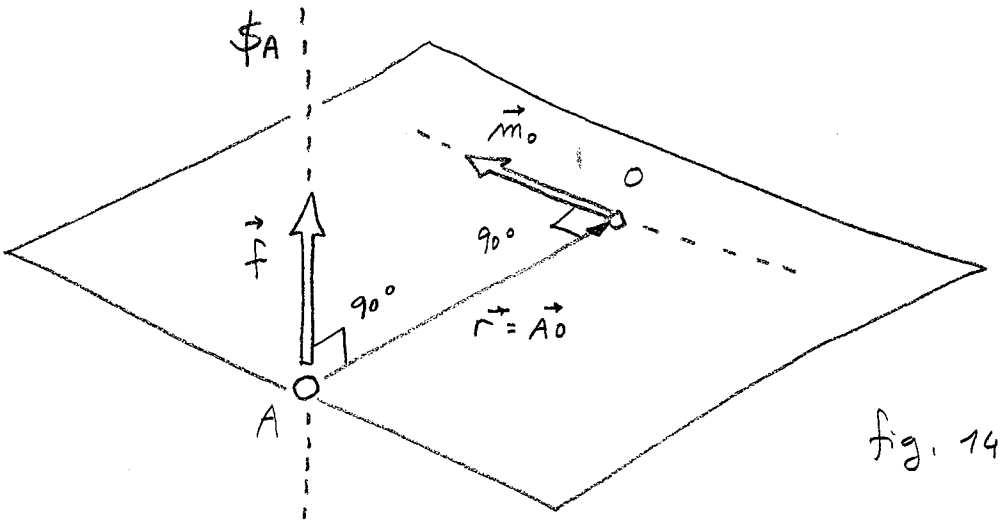

fig. 14

Clearly, the distance a from O to A is

$$a = \frac{|\vec{m}_o|}{|\vec{f}|},$$

because $\vec{m}_o = \vec{f} \times \vec{r}$. Also, the unit vector in the direction of $\vec{r}_A = \vec{OA}$ is

$$\vec{v} = \frac{\vec{f} \times \vec{m}_o}{|\vec{f} \times \vec{m}_o|}.$$

Thus, the position vector of A as a function of $\vec{m}_o$ and $\vec{f}$ is

$$\vec{r}_A = \vec{OA} = a \cdot \vec{v} = \frac{|\vec{m}_o|}{|\vec{f}|} \cdot \frac{\vec{f} \times \vec{m}_o}{|\vec{f} \times \vec{m}_o|}$$

But now we know that $|\vec{f} \times \vec{m}_o| = |\vec{f}| \cdot |\vec{m}_o|$, and that $\vec{f} \times \vec{m}_o = \vec{f} \times (\vec{c}_o - h \cdot \vec{f}) = \vec{f} \times \vec{c}_o$. Therefore,

$$\boxed{\vec{r}_A = \frac{\vec{f} \times \vec{c}_o}{|\vec{f}|^2} \qquad (F2)}$$

3.3 EXTREME CASES OF THE WRENCH

We can distinguish two extreme cases of the wrench, depending on the values taken by the pitch h.

Pure force ($h=0$)

When $\vec{f}^T \cdot \vec{c}_o = 0$ with $|\vec{f}| \neq 0$, we say that the wrench encodes a <u>pure force</u> because, by applying (F1) we see that $h=0$, implying that $\vec{c}=0$. Thus, when reducing the system $\{\vec{f}, \vec{c}_o\}$ to the central axis, we only obtain a force $\vec{f}$ with no associated couple. Additionally, since $\vec{c}_o$ is orthogonal to $\vec{f}$, from fig. 12 we see that we have $\vec{m}_o = \vec{c}_o$ directly. (*↓)

Pure couple ($h=\infty$)

This is the null vector of 3 components

When $|\vec{f}|=0$, the wrench takes the form $\vec{w} = \begin{bmatrix} \vec{0} \\ \vec{c}_o \end{bmatrix}$, and we say it is a <u>pure couple</u>, because it has no component of force. Since $|\vec{f}|=0$, we cannot

---

(*) We can also infer that $\vec{c}_o = \vec{m}_o$ from Eq. (*) in page 17.

page 18

apply Eq. (F1) to determine the pitch h. However, from fig. 12 we see that if $|\vec{f}|$ tends to zero while keeping $\vec{c}_0$ constant, then point A moves to infinity in the positive direction of the x axis, and the pitch h tends to infinity. For this reason, a pure couple is said to be a <u>wrench of infinite pitch</u>. In the limit, when $|\vec{f}|=0$, it makes no sense to compute the central axis, because $|\vec{f}|=0$ and hence there is no preferred direction to align $\vec{c}_0$ with. Therefore, it makes no sense to apply Eq. (F2) to compute the position $\vec{r}_A$ of the central axis. We already see, in fact, that since $|\vec{f}|=0$ Eq. (F2) is unapplicable.

4.- THE PLÜCKER COORDINATES OF A SPATIAL LINE

4.1 PROPER LINES

We have seen that, when $|\vec{f}|\neq 0$, the vector $\begin{bmatrix}\vec{f}\\ \vec{m}_0\end{bmatrix}$ that we can extract from the wrench $\hat{w}$ defines a unique line $\$_A$ in 3-space, of direction vector $\vec{f}$ and position $\vec{r}_A$ given by Eq. (F2). Here $\begin{bmatrix}\vec{f}\\ \vec{m}_0\end{bmatrix}$ is a vector with physical meaning, because $\vec{f}$ and $\vec{m}_0$ have units of force (N) and moment (N·m). In general, however, if we don't think of a particular physical interpretation, we can affirm

that any vector adopting the form $\hat{\ell} = \begin{bmatrix} \vec{s} \\ \vec{s}_o \end{bmatrix}$ with $|\vec{s}| \neq 0$, $\vec{s} \in \mathbb{R}^3$, $\vec{s}_o \in \mathbb{R}^3$, and $\vec{s}^T \cdot \vec{s}_o = 0$, defines a unique line $\$_A$ in 3-space, with unit vector $\vec{s}$ and position determined by

$$\vec{r}_A = \frac{\vec{s} \times \vec{s}_o}{|\vec{s}|^2}$$

This can be seen in fig. 15, which is analogous to fig. 14.

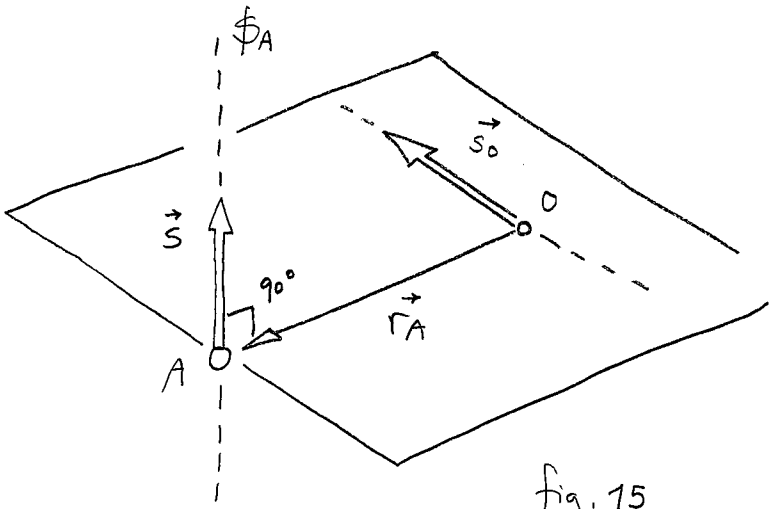

fig. 15

The six-component vectors $\hat{\ell}$ are called <u>extensors</u> in the so-called Grassmann-Cayley algebra. We often write $\hat{\ell} = [\underbrace{L, M, N}_{\vec{s}}; \underbrace{P, Q, R}_{\vec{s}_o}]^T$ and we say that L, M, N, P, Q, and R are the Plücker coordinates of the line $\$_A$, in honor of Julius Plücker (1801-1868), who was the first to propose them as a way to coordinatize arbitrary lines in 3-space.

Since $\hat{\ell}$ defines not only a line, but also the vector $\vec{s} = \begin{bmatrix} L \\ M \\ N \end{bmatrix}$ on the line, sometimes we say that $\hat{\ell} = [L, M, N; P, Q, R]^T$ provides the coordinates

of a sliding vector on a line. A <u>line-bound vector</u> for short.

If we have two points with coordinates (x_1, y_1, z_1) and (x_2, y_2, z_2) that define a line (fig. 16), note that

$$L = x_2 - x_1 = \begin{vmatrix} 1 & x_1 \\ 1 & x_2 \end{vmatrix}$$

$$M = y_2 - y_1 = \begin{vmatrix} 1 & y_1 \\ 1 & y_2 \end{vmatrix}$$

$$N = z_2 - z_1 = \begin{vmatrix} 1 & z_1 \\ 1 & z_2 \end{vmatrix}$$

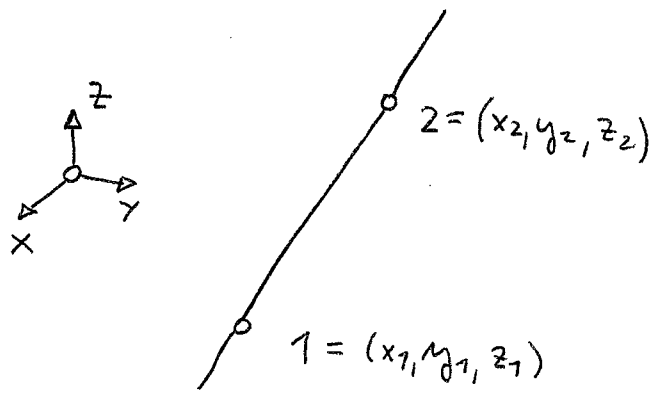

fig. 16

On the other hand, we clearly have

$$\begin{bmatrix} P \\ Q \\ R \end{bmatrix} = \begin{bmatrix} x_1 \\ y_1 \\ z_1 \end{bmatrix} \times \begin{bmatrix} L \\ M \\ N \end{bmatrix} = \begin{vmatrix} \vec{i} & \vec{j} & \vec{k} \\ x_1 & y_1 & z_1 \\ \underbrace{x_2 - x_1}_{L} & \underbrace{y_2 - y_1}_{M} & \underbrace{z_2 - z_1}_{N} \end{vmatrix} =$$

$$= \begin{vmatrix} \vec{i} & \vec{j} & \vec{k} \\ x_1 & y_1 & z_1 \\ x_2 & y_2 & z_2 \end{vmatrix} = \underbrace{\begin{vmatrix} y_1 & z_1 \\ y_2 & z_2 \end{vmatrix}}_{P} \vec{i} + \underbrace{\begin{vmatrix} z_1 & x_1 \\ z_2 & x_2 \end{vmatrix}}_{Q} \vec{j} + \underbrace{\begin{vmatrix} x_1 & y_1 \\ x_2 & y_2 \end{vmatrix}}_{R} \vec{k}$$

Thus, if we consider the matrix

$$F = \begin{bmatrix} 1 & x_1 & y_1 & z_1 \\ 1 & x_2 & y_2 & z_2 \end{bmatrix}$$

then we can obtain the Plücker coordinates of the line by taking the following 2x2 minors of F

$$\begin{array}{cccccc} L & M & N & P & Q & R \\ \| & \| & \| & \| & \| & \| \\ F_{12} & F_{13} & F_{14} & F_{34} & F_{42} & F_{23} \end{array}$$

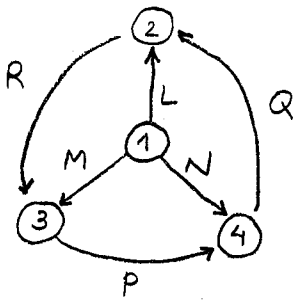

where F_{ij} is the 2x2 minor of F formed by columns i and j.

We finally note that the vector $\hat{\ell} = \begin{bmatrix} \vec{s} \\ \vec{s}_0 \end{bmatrix}$ is a vector of <u>homogeneous</u> coordinates, because $\hat{\ell}$ and $d\hat{\ell}$, where $d \in \mathbb{R} \setminus \{0\}$, define exactly the same line (although not the same sliding vector!).

4.2 IMPROPER LINES

From fig. 15 we see that if in a given extensor $\hat{\ell} = \begin{bmatrix} \vec{s} \\ \vec{s}_0 \end{bmatrix}$ we make $\vec{s}_A$ tend to zero keeping $\vec{s}_0$ constant, then the line $\$_A$ represented by $\hat{\ell}$ gets progressively displaced to infinity. In the limit, when $\vec{s} = 0$, $\$$ becomes the line at infinity of the plane π

orthogonal to $\vec{s}_0$ through O. For this reason, when $\hat{l}$ takes the form $\hat{l} = \begin{bmatrix} \vec{0} \\ \vec{s}_0 \end{bmatrix}$, we say that $\hat{l}$ encodes the line at infinity of the plane π (*), whose equation is

$$Px + Qy + Rz = 0$$

Mathematically, the only condition that a screw $\hat{l} = \begin{bmatrix} \vec{s}_1 \\ \vec{s}_2 \end{bmatrix}$ with $\vec{s}_1, \vec{s}_2 \in \mathbb{R}^3$ must accomplish to be an extensor is

$$\vec{s}_1^{\,T} \cdot \vec{s}_2 = 0$$

Thus, the vectors $\hat{l} = \begin{bmatrix} \vec{0} \\ \vec{s}_0 \end{bmatrix}$ are extensors as well.

Extensors, in sum, provide the coordinates of all lines in 3-space, be they proper, or improper (at infinity).

4.3 NORMALIZATION OF LINES

Let $\hat{l} = \begin{bmatrix} \vec{s} \\ \vec{s}_0 \end{bmatrix}$ be an extensor. When $|\vec{s}| = 0$ $\hat{l}$ represents a proper line. If, additionally, $|\vec{s}| = 1$, $\hat{l}$ provides the normalized (or unit) coordinates of the line, because it defines a unit vector sliding along the line.

(*) We can also interpret $\begin{bmatrix} \vec{0} \\ \vec{s}_0 \end{bmatrix}$ as an infinitesimal vector sliding along the line at infinity of plane π.

When $|\vec{s}|=0$ and $|\vec{s}|\neq 0$, the extensor takes the form

$$\hat{\ell} = \begin{bmatrix} \vec{0} \\ \vec{s}_0 \end{bmatrix}$$

and represents an improper line. If, additionally, $|\vec{s}_0|=1$, $\hat{\ell}$ is said to provide the normalized coordinates of the line at infinity of the plane π through the origin, with normal vector $\vec{s}_0$.

5.- FORCES AND COUPLES AS MULTIPLES OF LINES

Consider a pure force with wrench $\hat{w} = \begin{bmatrix} \vec{f} \\ \vec{m}_0 \end{bmatrix}$. We often write $\hat{w}$ in the following form

$$\hat{w} = f \begin{bmatrix} \vec{s} \\ \vec{s}_0 \end{bmatrix} = f \cdot \hat{s}$$

where $\hat{s} = \begin{bmatrix} \vec{s} \\ \vec{s}_0 \end{bmatrix}$ are the normalized coordinates of the action line $\$$ of $\hat{w}$ (the central axis of $\hat{w}$), and f is a non-null scalar providing the magnitude of the force. This decomposition allows to interpret the wrench as a geometric object (the line $\begin{bmatrix} \vec{s} \\ \vec{s}_0 \end{bmatrix}$) with physical meaning (the magnitude f of the force).

In a similar way, the wrench $\hat{w} = \begin{bmatrix} 0 \\ \vec{m}_0 \end{bmatrix}$ representing a pure couple can be written as

$$\hat{w} = m \begin{bmatrix} \vec{0} \\ \vec{s}_0 \end{bmatrix} = m \cdot \hat{s}$$

where $\hat{s} = \begin{bmatrix} \vec{0} \\ \vec{s}_0 \end{bmatrix}$ are the normalized coordinates of the

line at infinity $\begin{bmatrix} 0 \\ \vec{s}_0 \end{bmatrix}$, and m is the signed magnitude of the couple. A pure couple, thus, can be interpreted as a special case of a force. We see in fig. 14 that if we make $\vec{f}$ tend to zero while keeping $\vec{m}_0$ constant, then $\$_A$ tends to the mentioned line at infinity. The couple $\hat{w} = \begin{bmatrix} 0 \\ \vec{m}_0 \end{bmatrix}$ can be thought of as a force of infinitesimal magnitude applied on this line at infinity.

APPENDIX 1 (TO PART A) COUPLES AS FORCE SYSTEMS

Usually, most students are well familiarized with the concept of force, but less with the concept of couple. We here recall basic important facts about the latter concept.

A couple is simply a force system formed by two antiparallel forces of equal intensity, $\vec{f}$ and $-\vec{f}$, applied along parallel non-coincident lines $\$_1$ and $\$_2$ (fig. A1)

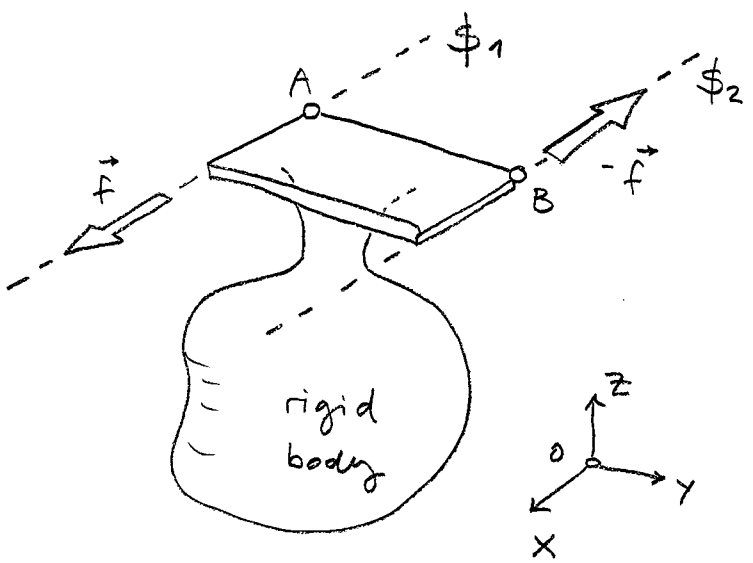

fig. A1. A couple, seen as a force system of two antiparallel forces.

For this reason, a system of forces and couples can be seen as a system of forces exclusively, one in which each couple is thought of as two antiparallel forces.

Note that the resultant force of a couple is null. We next see that the resultant moment $\vec{m}$ of a couple

with respect to the origin O is independent of the position of O (this is the so-called Varignon 2nd moment theorem).

By computing the resultant moment of $\vec{f}$ and $-\vec{f}$ with respect to O we see that

$$\vec{m} = \vec{OA} \times \vec{f} + \vec{OB} \times (-\vec{f}) =$$
$$= (\vec{OB} + \vec{BA}) \times \vec{f} + \vec{OB} \times (-\vec{f}) =$$
$$= \vec{BA} \times \vec{f}$$

Thus, the moment of the couple with respect to O is in fact the moment of $\vec{f}$ with respect to any point B of the line $\$_2$. It is easy to see that

$$\vec{m} = \vec{BA} \times \vec{f} = \vec{r} \times \vec{f}$$

where $\vec{r}$ is the position vector of $\$_1$ with respect to $\$_2$, along the common perpendicular line of $\$_1$ and $\$_2$ (fig. A2)

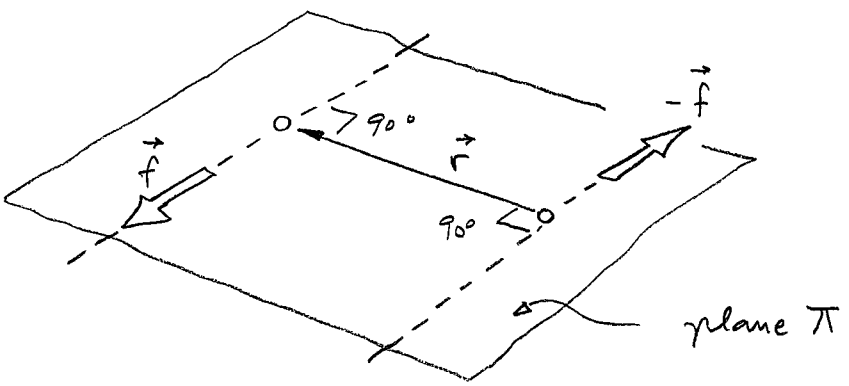

fig. A2

Clearly, the moment of the couple with respect to O does not depend on the position of O, and it is invariant to position changes of the lines $\$_1$ and $\$_2$, as long as these lines keep their mutual

distance, and are kept in planes parallel to plane π (fig. A2).

We now observe that two couples with a same moment $\vec{m}$ are mechanically equivalent (due to the principle of equivalence). Fig. A3 illustrates two different couples with a same moment $\vec{m}$.

It is for this reason that the vector $\vec{m} = \vec{r} \times \vec{f}$ is taken as a representative of all possible couples that give rise to this moment. It is very common to accept the abuse of language of saying that $\vec{m}$ represents (or even that it <u>is</u>) "<u>a couple of forces</u>", when it actually represents an <u>infinite family of mechanically equivalent couples</u>.

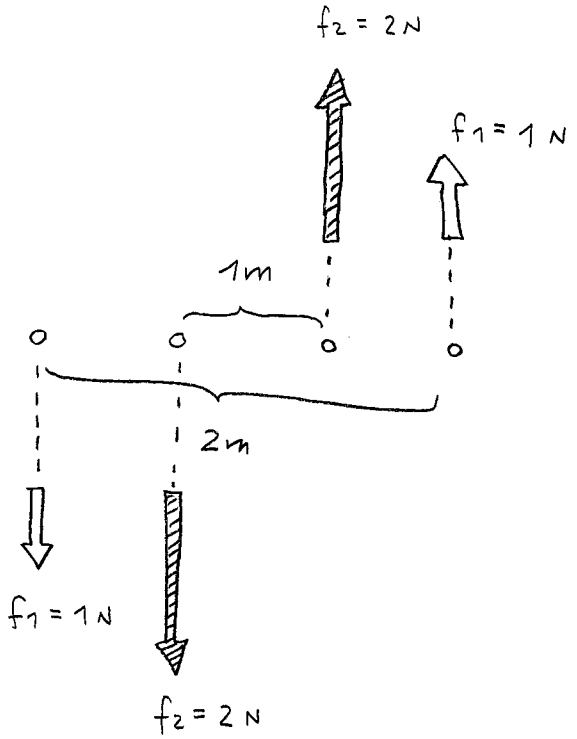

fig. A3 The couple formed by the forces f_1 has the same (resultant) moment than the one formed by the forces f_2.

Contrarily to force vectors, which are associated with a given action line, couple vectors (thought of as the $\vec{m}$ vector) are <u>free vectors</u>. They are not bound to

lie on any particular line.

Note finally that we usually use the expression

"the couple $\vec{m}$",

when we actually mean

"the couple of moment $\vec{m}$".

PART B : CHASLES's THEOREM AND THE GENERAL TWIST

Just like in statics we have found a compact way to describe the system of forces acting on a rigid body, in kinematics we will seek a compact way to represent the velocity field of a moving rigid body. Again, the screw vector will turn to be the ideal geometric vehicle to this end.

Since in a robotic mechanism every body is connected to ground by means of a serial chain of bodies and joints, it suffices to study the velocity field induced by such a chain on its end body (fig. B1).

We will consider that the chain only contains prismatic (P) or revolute (R) joints, because any lower pair joint can be seen as a combination of P or R joints (at the instantaneous kinematic level).

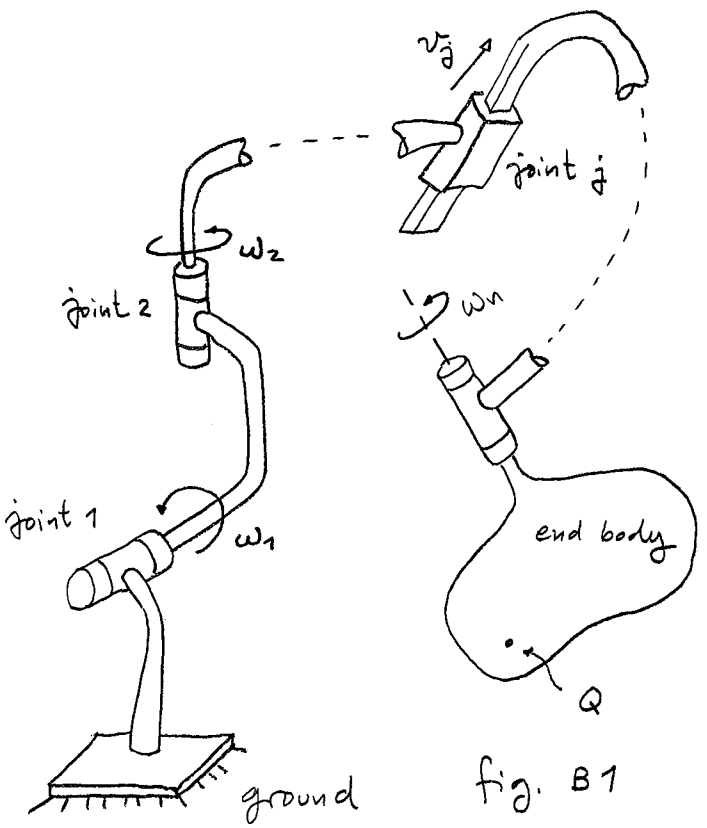

fig. B1

We begin by describing the velocity field of the end body in which the chain contains just one joint (either prismatic or revolute). Then we show that the velocity field induced by an arbitrary chain can always be induced by an equivalent PR chain. The reasoning is in complete analogy to the one explained in Part A to reduce arbitrary force systems.

1.- ELEMENTARY VELOCITY FIELDS

Consider the two situations of fig. B2, in which a rigid body is connected to ground through a revolute (a) or prismatic (b) joint.

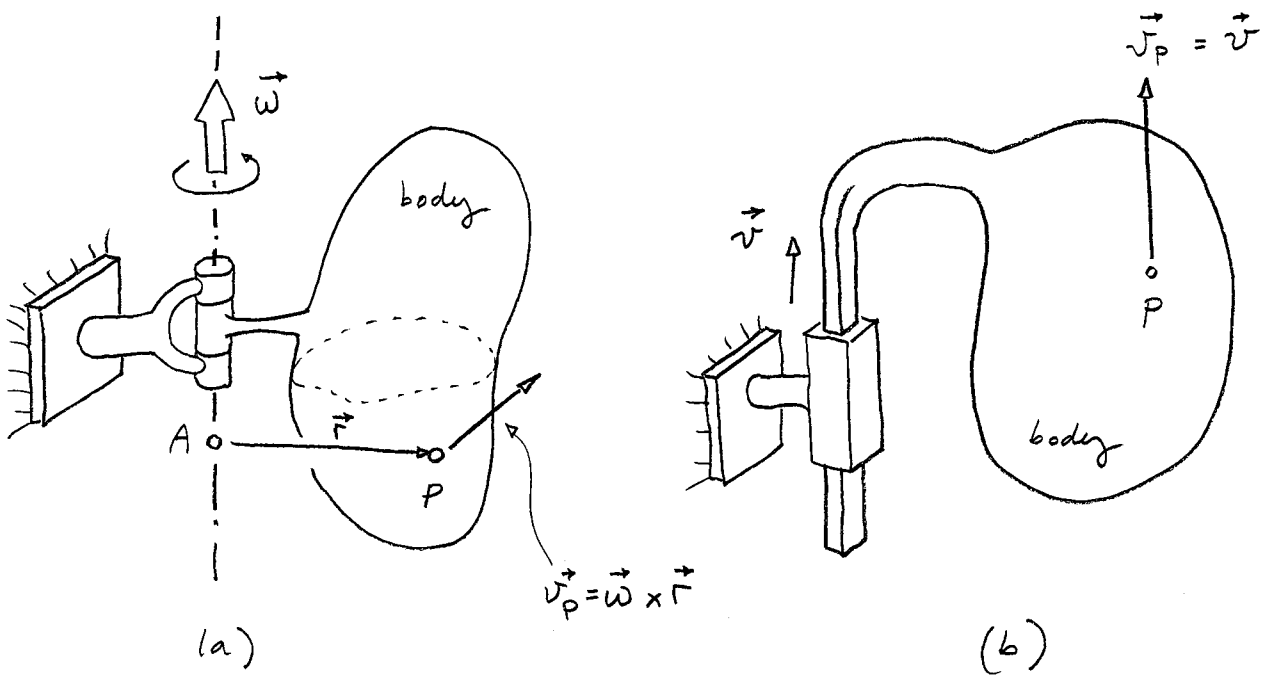

Fig. B2 Velocity induced on a point P by a pure rotation (a) and a pure translation (b).

In the first case, if $\vec{\omega}$ is the angular velocity vector of the body, the velocity of P is

$$\vec{v}_P = \vec{\omega} \times \vec{r},$$

where $\vec{r}$ is the vector from any point A of the axis of rotation, to the point P. We clearly have a velocity field in which the velocities of the points of the body are proportional to their distance to the rotation axis.

In the second case, the velocity of all points of the body is the same. It is the displacement velocity $\vec{v}$ of the prismatic joint:

$$\vec{v}_P = \vec{v} \quad \forall P \in \text{body}$$

we thus have a constant velocity fied on the body.

2.- REDUCTION OPERATIONS

2.1.- SHIFTING OF REVOLUTE JOINTS

Now consider that a body is rotating about an axis $\$_1$ with angular velocity $\vec{\omega}_1$ (fig. B3). Suppose that we wish to move the joint to a new axis $\$_2$ parallel to $\$_1$, without changing the velocity field induced on the body. To achieve so, we will have to add a compensating velocity

$$\vec{v} = \vec{\omega} \times \vec{r}$$

to all points of the body, where $\vec{r}$ is the vector $\vec{AB}$

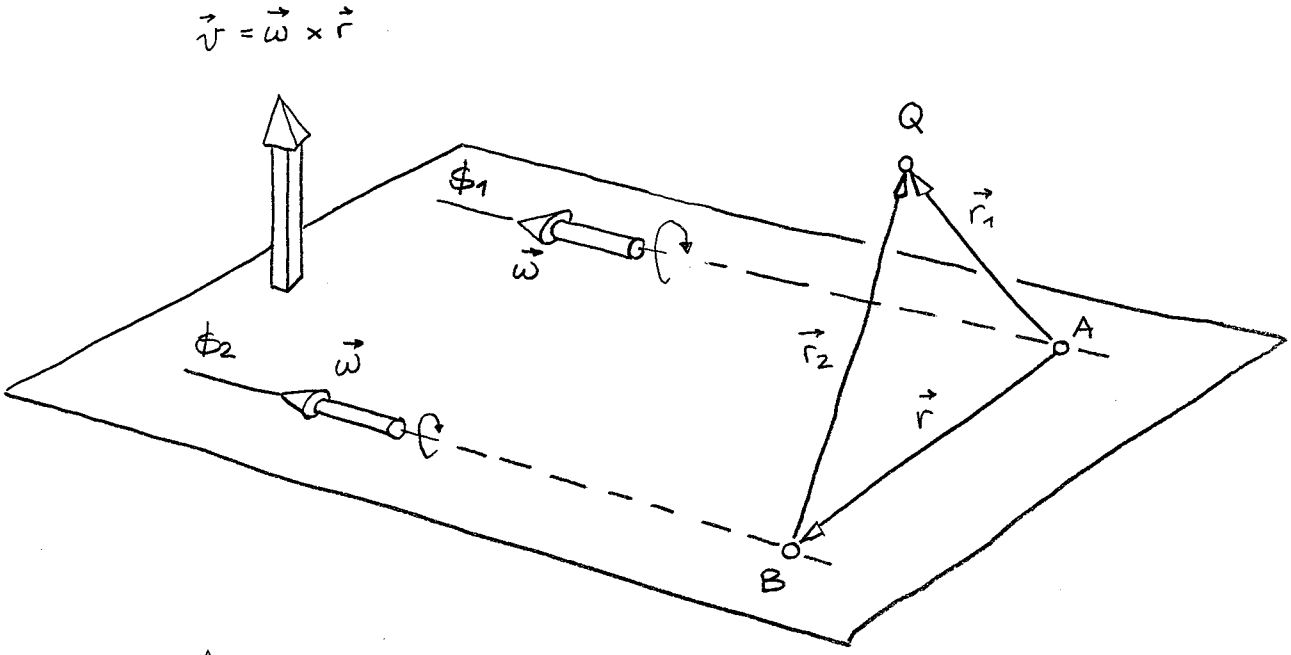

fig. B3 Shifting operation of a revolute joint

from any point A on $\$_1$ to any point B of $\$_2$. This is equivalent to substituting the original revolute joint by a new PR chain, as shown in fig. B4.

From fig. B3 we see that both the original R joint (on $\$_1$) and the substitute PR chain induce the same velocity $\vec{v}_Q$ on any point Q of the body. In the original chain we have

$$\vec{v}_Q = \vec{\omega} \times \vec{r}_1$$

where $\vec{r}_1 = \vec{AQ}$. For the substitute PR chain we have

$$\vec{v}_Q = \vec{\omega} \times \vec{r}_2 + \vec{v}$$

where $\vec{r}_2 = \vec{BQ}$. But since $\vec{v} = \vec{\omega} \times \vec{r}$, then it will be

fig. B4 The original joint (a) and its equivalent PR chain (b), after applying a parallel shifting operation

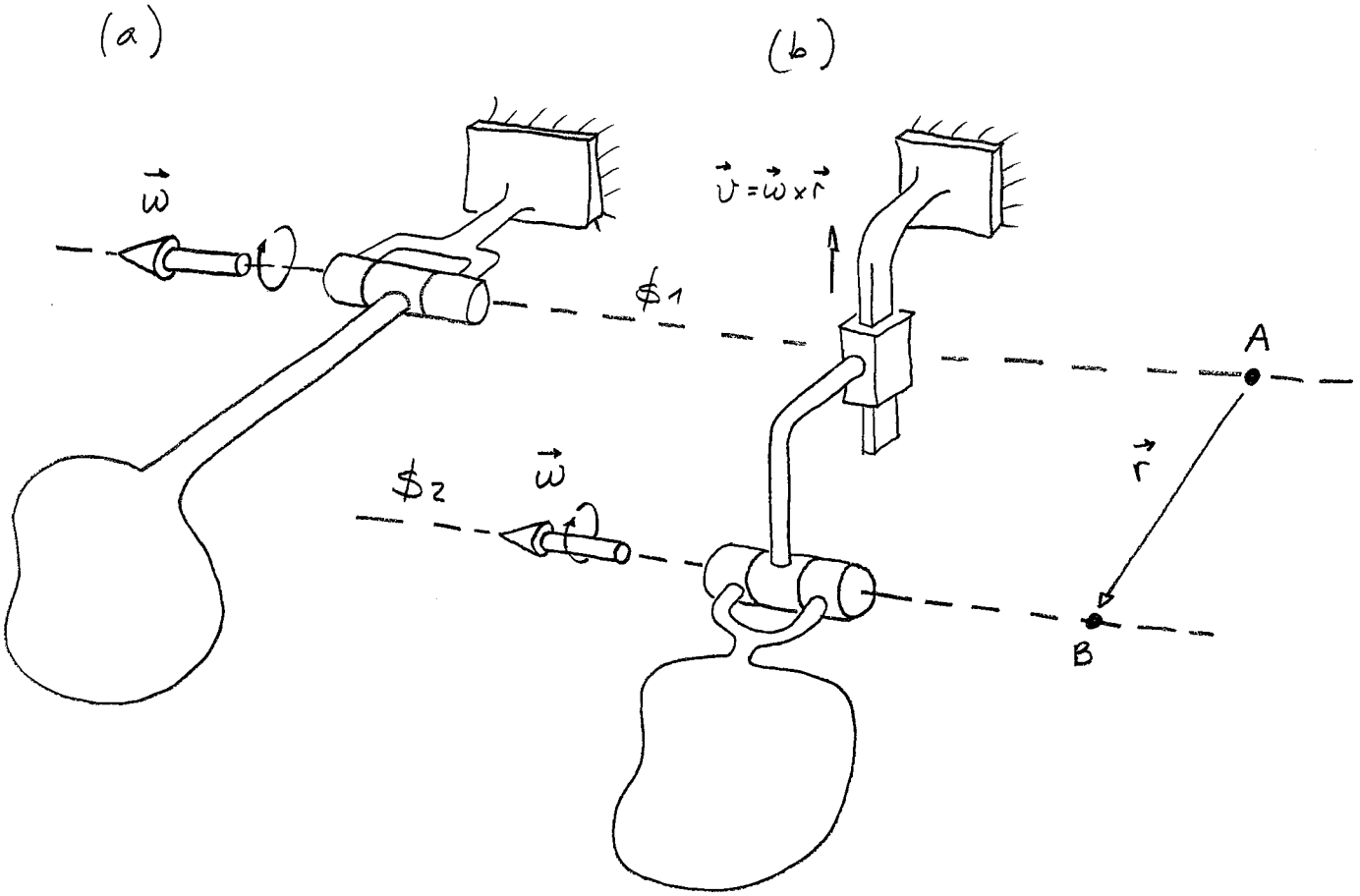

$$\vec{v}_Q = \vec{\omega} \times \vec{r}_2 + \vec{v} = \vec{\omega} \times \vec{r}_2 + \vec{\omega} \times \vec{r} = \vec{\omega} \times (\vec{r} + \vec{r}_2) = \vec{\omega} \times \vec{r}_1$$

and therefore the two chains will induce the same velocity field.

2.2 SHIFTING OF PRISMATIC JOINTS

A prismatic joint can be shifted parallel to itself without changing the velocity field that it induces on a rigid body (fig. B5).

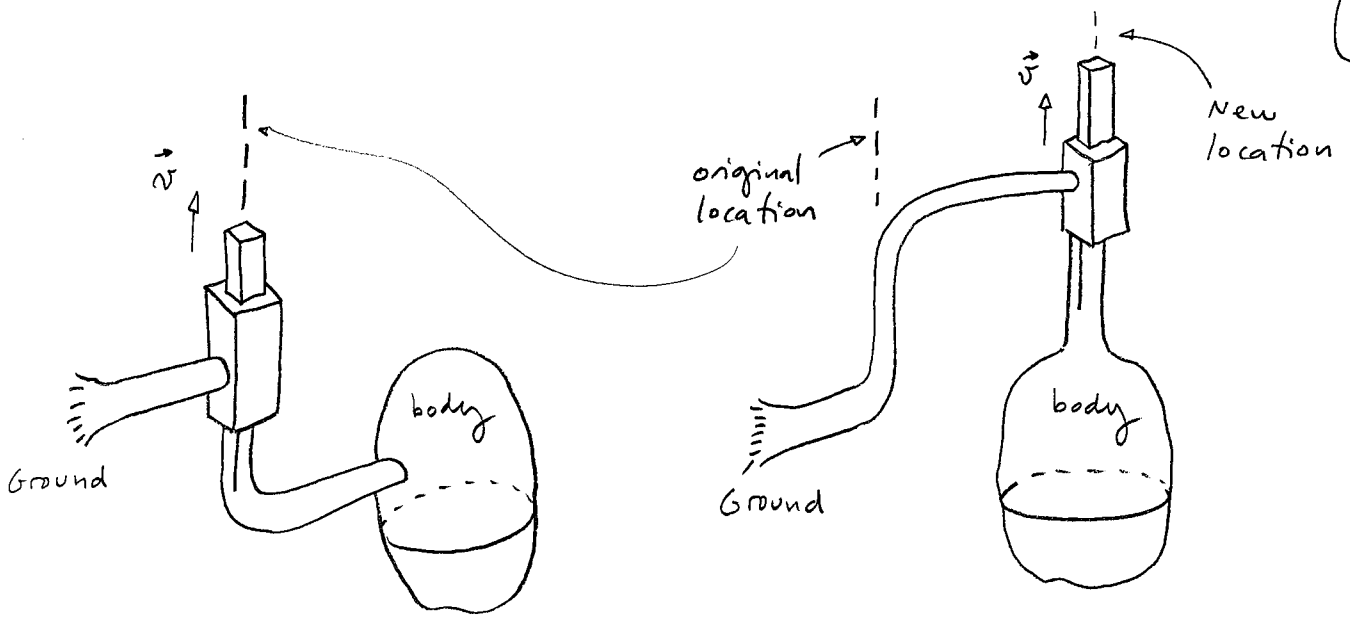

fig. B5 If $\vec{v}$ is the relative linear velocity of a prismatic joint, the velocity of all points of the body will be $\vec{v}$, independently of the location of the joint (as long as it is kept parallel to itself).

2.3 COMBINATION OF CONCURRENT R JOINTS

Let us now consider the situation of fig. B6, in which a rigid body is connected to ground through a two-revolute chain. The two revolute joint axes are concurrent at point A. The relative angular velocities at the joints are $\vec{\omega}_1$ and $\vec{\omega}_2$.

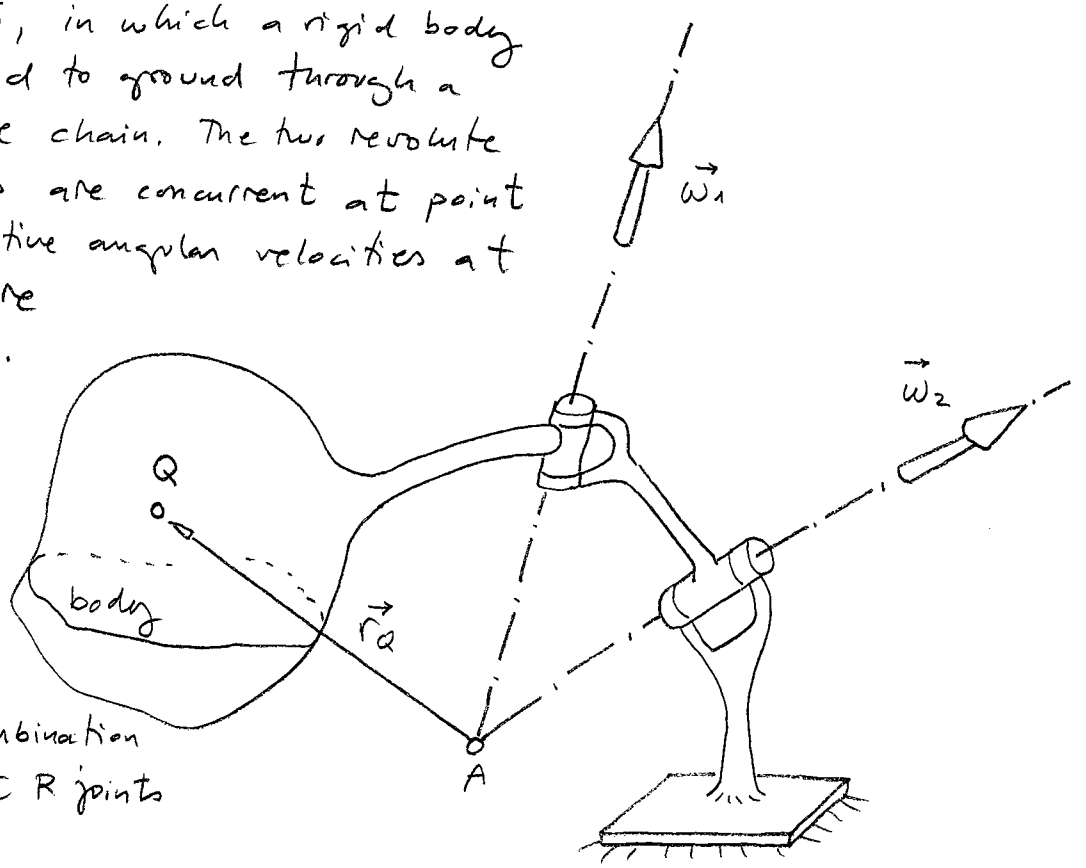

fig. B6 Combination of concurrent R joints

Since the velocity of any point Q on the body is

$$\vec{v}_Q = \vec{\omega}_1 \times \vec{r}_Q + \vec{\omega}_2 \times \vec{r}_Q = (\vec{\omega}_1 + \vec{\omega}_2) \times \vec{r}_Q$$

where $\vec{r}_Q = \vec{AQ}$, we can clearly replace the two revolute joints by a single, instantaneously equivalent revolute joint located on an axis through A, with direction vector $\vec{\omega}_1 + \vec{\omega}_2$. This reduction operation is the kinematic analogue of the rule of the parallelogram in Statics.

2.4. COMBINATION OF PRISMATIC JOINTS

In a similar way, two prismatic joints connected in series, with relative linear velocities $\vec{v}_1$ and $\vec{v}_2$, can be substituted by a single prismatic joint moving with velocity $\vec{v}_1 + \vec{v}_2$. The axis of this joint joint can be located anywhere in 3-space, but its direction vector must be parallel to $\vec{v}_1 + \vec{v}_2$ (fig. B7)

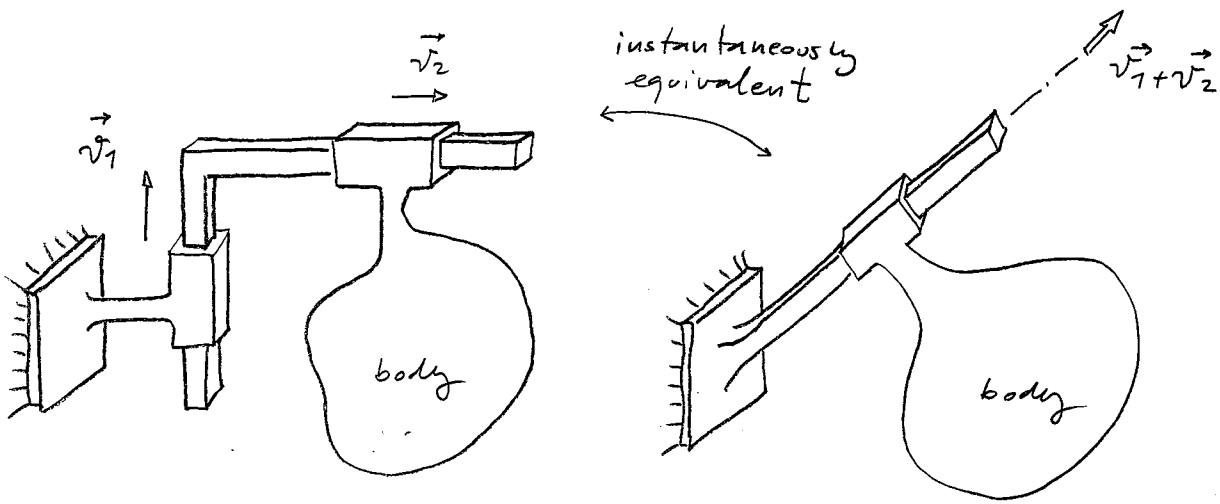

fig. B7 Combination of prismatic joints

2.5 REDUCTION TO THE ORIGIN

Let us now consider the general serial kinematic chain of fig. B1, which is assumed to be formed by n revolute joints (R) whose rotation axis is known, with angular velocities $\vec{\omega}_1, \dots, \vec{\omega}_n$, and m prismatic joints (P), of relative linear velocities $\vec{v}_1, \dots, \vec{v}_m$. We next show that, using the reduction operations in Sections 2.1 - 2.4, we can substitute this chain by an (instantaneously) equivalent PR chain whose revolute joint axis goes through the origin.

To this end, note first that, thanks to the law of composition of velocities, the velocity of a point Q of the end body of the chain (fig. B1) is the sum of the velocity vectors induced by each joint individually, assuming that the remainint joints are locked:

$$\vec{v}_Q = \sum_{i=1}^{n} \vec{v}_{Q,i} + \sum_{j=1}^{m} \vec{v}_{Q,j}$$

velocity of point Q.

velocity induced on Q by the i-th revolute joint, assuming the remaining joints are locked.

velocity induced on Q by the j-th prismatic joint, assuming the remaining joints are locked.

Since the previous vector sum is commutative, the velocity of Q only depends on the specific location of the joint axes (and on the value of the linear and angular velocities of the joints), but <u>not</u> on the order in which the joints are connected. We could connect the joints in a different order and the velocity of Q would be the same.

Without loss of generality, therefore, we can think that the first n joints of the chain are all of revolute type, while the m last joints are of prismatic type.

With this in mind, the reduction to a simple PR chain requires three steps only:

$\boxed{1}$ For each revolute joint R of angular velocity $\vec{\omega}_i$, we shift the joint to the origin O using the shifting operation in Section 2.1. This requires the addition of a compensating velocity $\vec{v}_{O,i} = \vec{\omega}_i \times \vec{r}_i$ (fig. B8), which can be thought of as a newly-added P joint.

fig. B8

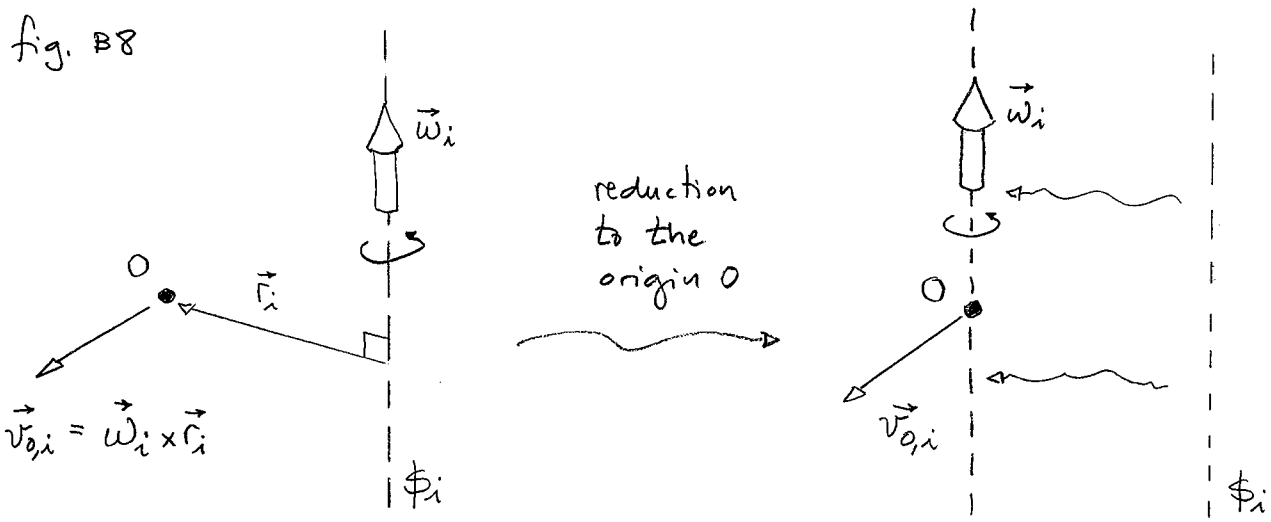

$\boxed{2}$ Once all of the revolute joints have been shifted to the origin O, their axes will all be concurrent at O, and we can substitute such joints by a single revolute joint of relative angular velocity

$$\vec{\omega} = \vec{\omega}_1 + \dots + \vec{\omega}_n$$

thanks to the operation of Section 2.3.

$\boxed{3}$ On the other hand, as we have seen in Section 2.2, the location of the prismatic joints is irrelevant, and using the operation of Section 2.4, we can replace all of such joints by a single prismatic joint of relative velocity

$$\vec{v}_0 = \underbrace{\vec{v}_{0,1} + \dots + \vec{v}_{0,n}}_{\text{Contribution of virtual P joints added as a result of the shifting operation on the } \vec{\omega}_i} + \underbrace{\vec{v}_1 + \dots + \vec{v}_m}_{\text{contribution of the original P joints}}$$

As a result of applying the steps $\boxed{1}$, $\boxed{2}$, $\boxed{3}$ we obtain an equivalent PR chain as depicted in fig. B9, in which the revolute joint axis meets the origin O of the reference frame.

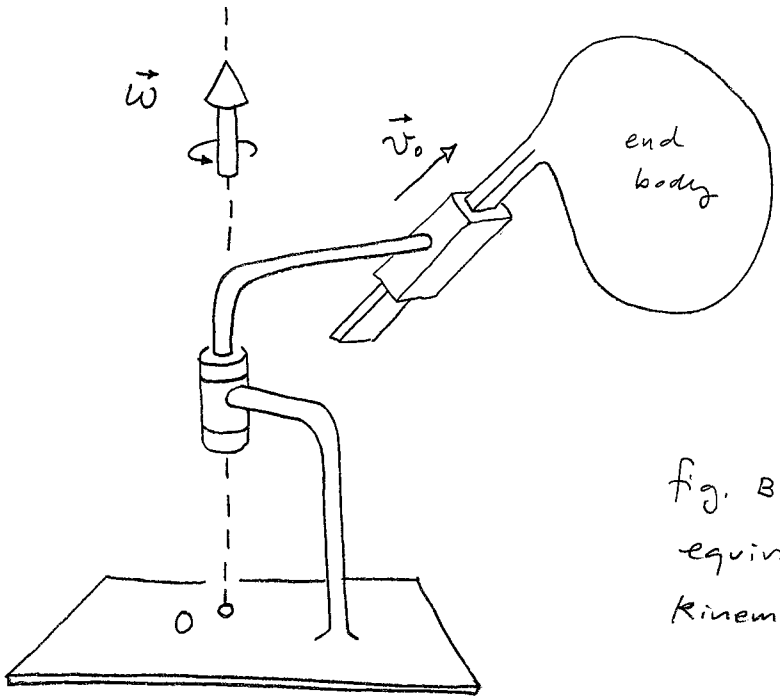

fig. B9. The PR chain equivalent to a general kinematic chain.

2.6 REDUCTION TO THE INSTANTANEOUS SCREW AXIS

It is natural to ask whether there exists a point A in 3-space such that, by reducing the kinematic chain to A, instead of to O, then the equivalent PR chain has the $\vec{\omega}$ and $\vec{v}_0$ vectors aligned. Clearly, we are in a situation analogous to that in Section 2.6 of Part A, in which the role of $\vec{f}$ and $\vec{c}_0$ is now played by $\vec{\omega}$ and $\vec{v}_0$, respectively.

Without loss of generality, we can assume that $\vec{\omega}$ is aligned with the z axis, that $\vec{v}_0$ is parallel to the yz plane, and that the projections of $\vec{v}_0$ on the y and z axes are $\vec{u}_0$ and $\vec{v}$ (fig. B10). Clearly, there will be a point A of the x axis for which the compensating velocity introduced (as a result of shifting $\vec{\omega}$ from O to A) will be equal to $-\vec{u}_0$, and therefore the original system formed by $\vec{\omega}$ and $\vec{v}_0$

will be reduced to the two aligned vectors $\vec{\omega}$ and $\vec{v}$. The line $\$_A$ through A with direction vector $\vec{\omega}$ is called the <u>instantaneous screw axis</u> and its existence was proved by Michel Chasles in 1832.(*↓) The name instantaneous screw axis reflects the fact that, in the time instant analyzed, the PR chain on axis $\$_A$ behaves like a simple chain with a helicoidal joint (a screw). as shown in Section 3.4 below. The end body rotates with an angular velocity $\vec{\omega}$ about $\$_A$, and translates along $\$_A$ with linear velocity $\vec{v}$ parallel to $\vec{\omega}$.

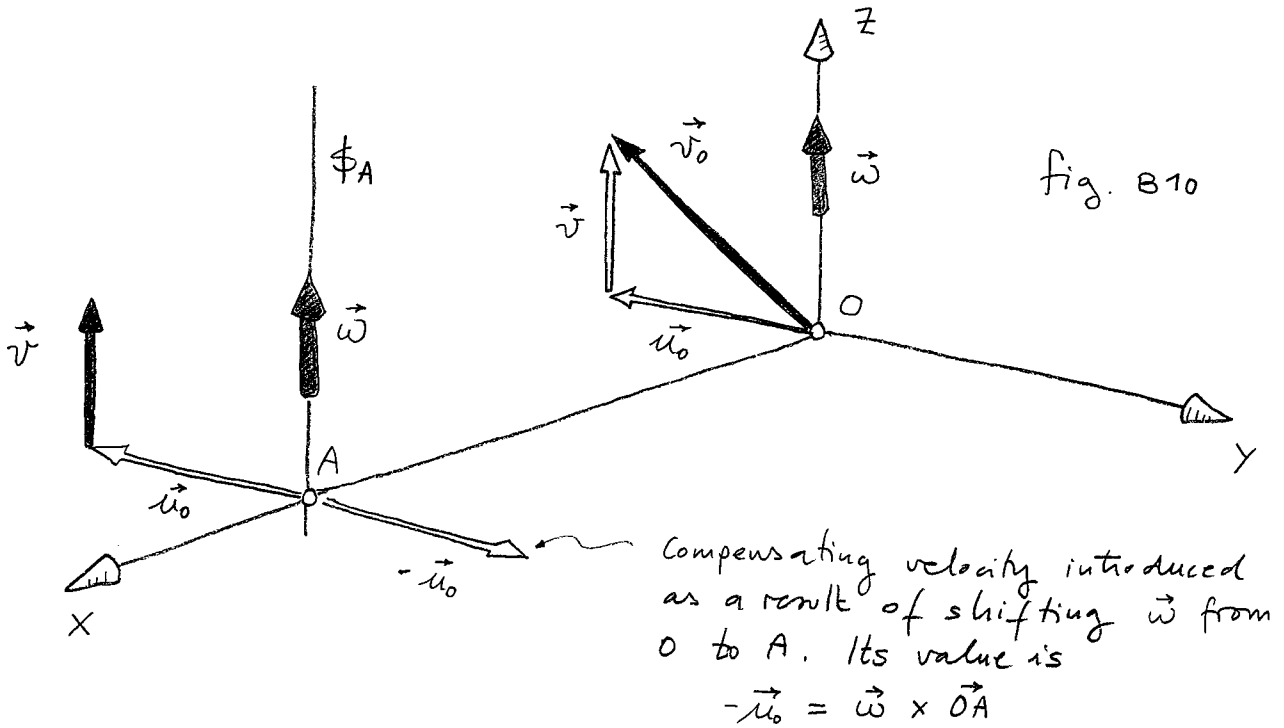

fig. B10

(*) Chasles's theorem, in fact, establishes the fact that any finite displacement of a rigid body can be achieved by a pure rotation about an axis, plus a translation parallel to that axis. We are here considering the instantaneous version of this theorem, which establishes the same fact for instantaneous velocities.

In sum, the velocity field of the end body of a serial chain can be interpreted in either of the following two ways:

$\boxed{1}$ As induced by a rotation of angular velocity $\vec{\omega}$ about an axis through the origin, plus a translation velocity $\vec{v}_0$

$\boxed{2}$ As induced by a rotation of angular velocity $\vec{\omega}$ about the instantaneous screw axis $\$_A$, plus a translation velocity $\vec{v}$ parallel to $\vec{\omega}$.

In the first case, the velocity of a point P of the body is

$$\boxed{\vec{v}_P = \vec{\omega} \times \vec{OP} + \vec{v}_0 \qquad (E1)}$$

and in the second case

$$\boxed{\vec{v}_P = \vec{\omega} \times \vec{AP} + \vec{v} \qquad (E2)}$$

From fig. B10, and using the facts that $\vec{v}_0 = \vec{u}_0 + \vec{v}$ and $\vec{u}_0 = \vec{\omega} \times \vec{AO}$ it is easy to see that (E1) is equivalent to (E2), because

$$\vec{v}_P = \vec{\omega} \times \vec{OP} + \vec{v}_0 = \vec{\omega} \times \vec{OP} + \underbrace{\vec{u}_0}_{\vec{\omega} \times \vec{AO}} + \vec{v} =$$

$$= \vec{\omega} \times \vec{OP} + \vec{\omega} \times \vec{AO} + \vec{v} = \vec{\omega} \times (\vec{AO} + \vec{OP}) + \vec{v} =$$

$$= \vec{\omega} \times \vec{AP} + \vec{v}.$$

3.- THE EQUIVALENT TWIST

3.1 DEFINITION

The six-dimensional vector $\hat{t} = \begin{bmatrix} \vec{\omega} \\ \vec{v}_0 \end{bmatrix}$ is called the equivalent <u>twist</u> of the original kinematic chain.

Note that $\hat{t}$ contains the necessary ingredients to compute the velocity of any point P of the rigid body (the end body), by applying Eq. (E1) in the previous page.

3.2.- VECTOR DECOMPOSITION, PITCH, AND AXIS LINE

As it occurred in the case of force systems, the vectors $\vec{\omega}$ and $\vec{v}_0$ determine the line $\$_A$ and the vector $\vec{v}$. We define the <u>pitch</u> h of the twist $\hat{t}$ as the proportion ratio between $\vec{v}$ and $\vec{\omega}$. I.e.:

$$\vec{v} = h \cdot \vec{\omega}$$

Clearly, we can say that $\hat{t}$ determines a sliding vector $\vec{\omega}$ bound to lie on $\$_A$, plus a proportionality factor h. Thus, $\hat{t}$ is a screw with kinematic meaning.

Following a line of reasoning similar to the one in Section 3.1 of part A, we obtain the following formulas that express h and the position vector $\vec{r}_A$ of the point A on $\$_A$ that is closest to the origin,

as a function of $\vec{\omega}$ and $\vec{v}_0$:

$$\boxed{h = \frac{\vec{\omega}^T \cdot \vec{v}_0}{|\vec{\omega}|^2} \qquad (G1)}$$

$$\boxed{\vec{r}_A = \frac{\vec{\omega} \times \vec{v}_0}{|\vec{\omega}|^2} \qquad (G2)}$$

Knowing the pitch h it is easy to obtain $\vec{v}$ and $\vec{u}_0$ as a function of $\vec{\omega}$ and $\vec{v}_0$:

$$\vec{v} = h\vec{\omega} \ ,$$
$$\vec{u}_0 = \vec{v}_0 - \vec{v} = \vec{v}_0 - h\vec{\omega} \ ,$$

and hence we can decompose $\hat{t}$ in the following way:

$$\hat{t} = \begin{bmatrix} \vec{\omega} \\ \vec{v}_0 \end{bmatrix} = \begin{bmatrix} \vec{\omega} \\ \vec{u}_0 \end{bmatrix} + \begin{bmatrix} \vec{0} \\ \vec{v} \end{bmatrix} \qquad (H)$$

Note that, since $\vec{u}_0 = \vec{\omega} \times \vec{AO}$ (see page 43), $\vec{u}_0$ is, in fact, the moment of $\vec{\omega}$ with respect to the origin O (assuming $\vec{\omega}$ is on $\$_A$) and hence the vector $\begin{bmatrix} \vec{\omega} \\ \vec{u}_0 \end{bmatrix}$ is the Plücker coordinate vector of line $\$_A$. Alternatively, we can also see $\begin{bmatrix} \vec{\omega} \\ \vec{u}_0 \end{bmatrix}$ as a vector defining a sliding vector $\vec{\omega}$ on $\$_A$.

3.3.- EXTREME CASES OF THE TWIST

As it occurred with wrenches, we can distinguish two extreme instances of a twist, depending on the values of the pitch.

Pure rotation ($h=0$)

When $\vec{\omega}^T \cdot \vec{v}_0 = 0$ with $|\vec{\omega}| \neq 0$, the twist is said to represent a pure instantaneous rotation because, by applying (G1) we obtain $h=0$, and hence the translational velocity $\vec{v}$ along $\$_A$ is null. On the other hand, since $\vec{v}_0$ is orthogonal to $\vec{\omega}$, $\vec{u}_0 = \vec{c}_0$.

Pure translation ($h=\infty$)

When $|\vec{\omega}| = 0$, the twist takes the form $\hat{t} = \begin{bmatrix} \vec{0} \\ \vec{v}_0 \end{bmatrix}$ and it is said to represent a pure instantaneous translation because it contains no angular velocity component. In a way analogous to pure couples (Section 3.3 of part A, page 21), a pure translation twist is said to have a pitch $h=\infty$.

Note from Eq. (H) that any twist $\hat{t}$ can be seen as the sum of a zero-pitch twist $\begin{bmatrix} \vec{\omega} \\ \vec{u}_0 \end{bmatrix}$

plus an infinity-pitch twist $\begin{bmatrix} 0 \\ \vec{v} \end{bmatrix}$, each of which having an associated line

$\begin{bmatrix} \vec{\omega} \\ \vec{u}_0 \end{bmatrix}$ → Provides the Plücker coordinates of the line $\$_A$, the instantaneous screw axis.

$\begin{bmatrix} 0 \\ \vec{v} \end{bmatrix}$ → Provides the Plücker coordinates of the line at infinity of the plane through the origin, with normal vector $\vec{v}$.

3.4.- THE HELICAL VELOCITY FIELD

It is relatively easy to see that the velocity field encoded by $\hat{t}$ is of helical type. That is, we can suppose that at the time instant analyzed, all points of the rigid body are following helical trajectories, as shown in fig. B11 (a). The tangent vectors to these trajectories provide the full velocity field of the body.

As a result, the PR chain of fig. B9 is instantaneously equivalent to a helical joint (fig. B11 (b)).

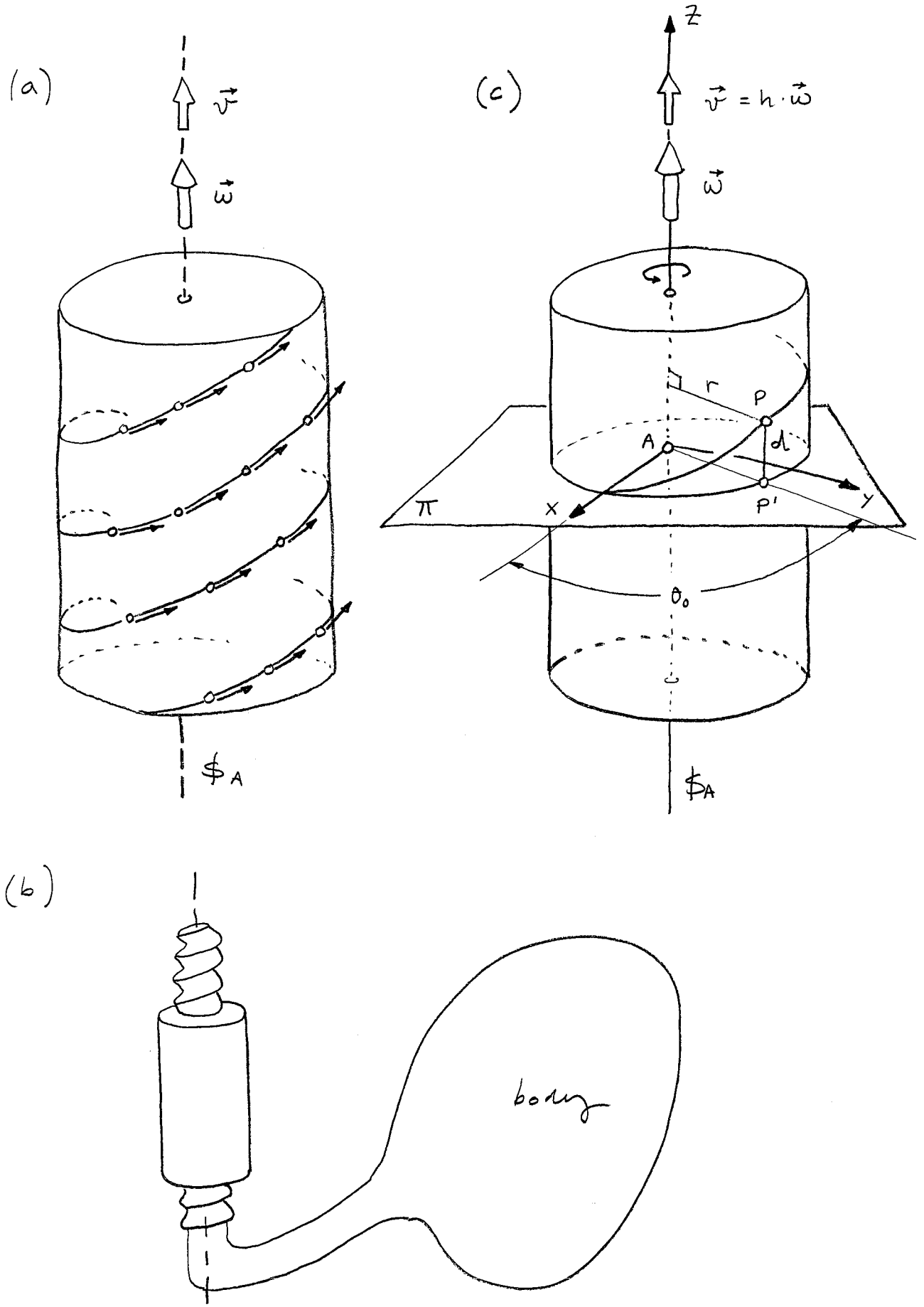

fig. B11. The helical velocity field encoded by a rotor $\hat{t}$, and the equivalent helical joint.

The virtual helical trajectory followed by a point P of the body can be defined as follows. We first assume that the velocity field of the body is the one induced by the angular velocity $\vec{\omega}$ about $\$_A$, together with the translational velocity $\vec{v}$ along $\$_A$. This is interpretation $\boxed{2}$ of $\hat{t}$ in page 44. We next choose a plane π orthogonal to $\$_a$, through point A of $\$_A$, and select a new reference frame centered in A, whose z axis is aligned with $\$_A$ (fig. B 11 (c)). In this frame $\vec{\omega}$ takes the form

$$\vec{\omega} = \begin{bmatrix} 0 \\ 0 \\ \omega \end{bmatrix}$$

Now, let:

- r be the distance between P and $\$_A$.
- P' be the projection of P on π.
- d be the distance between P and P'.

We place the x-axis in such a way that it forms an angle $\theta_0 = \frac{d}{h}$ with respect to the vector AP'.

Clearly, the parametrized curve

$$\vec{x}(\theta) = [x(\theta), y(\theta), z(\theta)] = [r \cdot \cos\theta, r \cdot \sin\theta, h \cdot \theta]$$

defines a helical trajectory in the chosen reference frame, and this trajectory meets point P for $\theta = \theta_0 = \frac{d}{h}$.

Suppose now that θ is a time varying function $\theta = \theta(t)$ such that $\theta(t_0) = \theta_0$ and $\dot{\theta}(t_0) = \omega$. One can always choose a function $\theta(t)$ verifying these conditions. If we now differentiate $\vec{x}(\theta(t)) = \vec{x}(t)$ with respect to time, we obtain

$$\dot{\vec{x}}(t) = \left[-r\dot{\theta}\sin\theta,\ r\dot{\theta}\cos\theta,\ h\dot{\theta}\right]$$

$$= \begin{bmatrix} 0 \\ 0 \\ \dot{\theta} \end{bmatrix} \times \begin{bmatrix} r\cos\theta \\ r\sin\theta \\ 0 \end{bmatrix} + \begin{bmatrix} 0 \\ 0 \\ h\dot{\theta} \end{bmatrix}$$

For $t = t_0$ we have

$$\dot{\vec{x}}(t_0) = \begin{bmatrix} 0 \\ 0 \\ \omega \end{bmatrix} \times \begin{bmatrix} r\cos\theta_0 \\ r\sin\theta_0 \\ 0 \end{bmatrix} + \begin{bmatrix} 0 \\ 0 \\ h\omega \end{bmatrix}$$

$$= \vec{\omega} \times \vec{AP'} + \underbrace{h\vec{\omega}}_{\vec{v}}$$

$$= \vec{\omega} \times \vec{AP} + \vec{v} = \vec{v}_P$$

Eq. (E2) in page 44

and we conclude that the velocity of P coincides with the velocity vector of the defined trajectory. This proves that P can be thought of as following such a virtual trajectory in the time instant analized.

We finally note that the pitch h of the twist $\hat{t}$ can be interpreted as the pitch of the helical trajectory just described (the shift in the z direction, for each increment of 2π radians in the value of θ). Thus, the equivalent helical joint of fig. B11 (b) is a screw of pitch h.

4. ROTATIONS AND TRANSLATIONS AS MULTIPLES OF LINES

When in a twist $\hat{t} = \begin{bmatrix} \vec{\omega} \\ \vec{v}_0 \end{bmatrix}$ $\vec{\omega}$ is orthogonal to $\vec{v}_0$, $\hat{t}$ directly provides the Plücker coordinates of the instantaneous screw axis $\$_A$. For pure rotations ($|\vec{\omega}| \neq 0$) the axis line is proper, whereas for pure translations ($|\vec{\omega}| = 0$) it is improper.

We often wish to express $\hat{t}$ as a multiple of the normalized coordinates $\hat{s} = \begin{bmatrix} \vec{s} \\ \vec{s}_0 \end{bmatrix}$ of the axis line. By defining $\omega = |\vec{\omega}|$ and $v = |\vec{v}_0|$ we obtain $\hat{s}$ as follows in each case:

- If $\omega \neq 0$: $\hat{s} = \dfrac{1}{\omega} \begin{bmatrix} \vec{\omega} \\ \vec{v}_0 \end{bmatrix}$ and we write $\hat{t} = \omega \cdot \hat{s}$
- If $\omega = 0$: $\hat{s} = \dfrac{1}{v} \begin{bmatrix} \vec{0} \\ \vec{v}_0 \end{bmatrix}$ and we write $\hat{t} = v \cdot \hat{s}$

PART C: KINETOSTATICS OF SERIAL AND PARALLEL SPATIAL ROBOTS

1. STATIC ANALYSIS OF A PARALLEL ROBOT

Note that the forces and couples acting on a rigid body (fig. C1) can be individually represented by means of zero- or infinity- pitch wrenches.

The wrench of the force $\vec{f}_i$ is

$$\hat{f}_i = \begin{bmatrix} \vec{f}_i \\ \vec{f}_i \times \vec{r}_i \end{bmatrix} \qquad (h=0)$$

where $\vec{r}_i = \overrightarrow{P_i O}$, being P_i any point of the action line of $\vec{f}_i$.

The wrench of the couple c_j is

$$\hat{c}_j = \begin{bmatrix} \vec{0} \\ \vec{c}_j \end{bmatrix} \qquad (h=\infty)$$

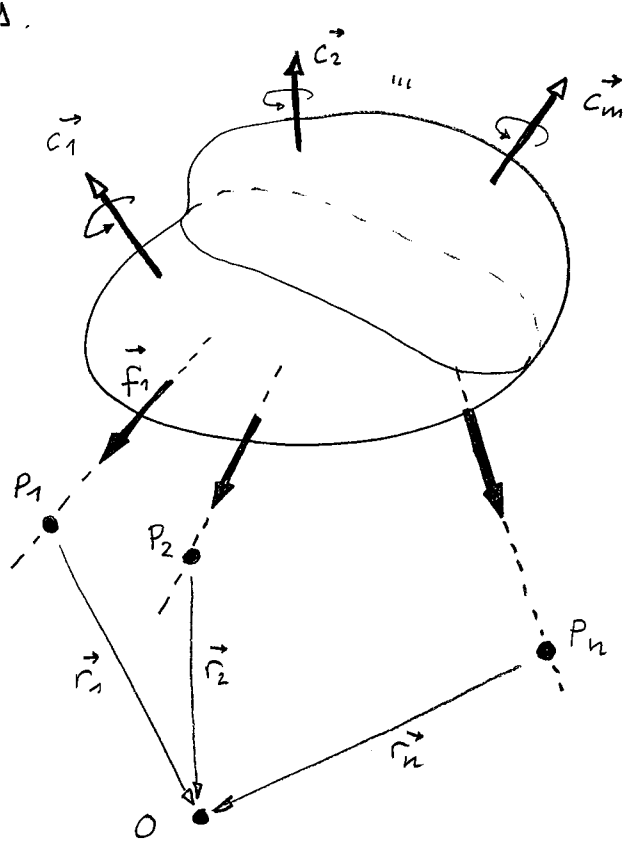

fig. C1

We also note that the process described in page 12 to obtain $\vec{f}$ and $\vec{c}_o$ (i.e., the resultant wrench $\hat{w} = \begin{bmatrix} \vec{f} \\ \vec{c}_o \end{bmatrix}$) is equivalent to computing the sum

$$\hat{w} = \sum_{i=1}^{n} \vec{f}_i + \sum_{j=1}^{m} \hat{c}_j = \begin{bmatrix} \vec{f}_1 + \dots + \vec{f}_n \\ \vec{c}_{o,1} + \dots + \vec{c}_{o,n} + \vec{c}_1 + \dots + \vec{c}_m \end{bmatrix},$$

where $\vec{c}_{o,i} = \vec{f}_i \times \vec{r}_i$.

The kinetostatic analysis of the Stewart Platform entails a particular instance of this process (fig. c2).

Since every leg is a UPS chain, the force that the leg applies to the platform is acting along the leg line. Hence, the resultant wrench applied by all legs on the platform is

$$\hat{w} = \begin{bmatrix} \vec{f}_1 \\ \vec{f}_1 \times \vec{r}_1 \end{bmatrix} + \dots + \begin{bmatrix} \vec{f}_6 \\ \vec{f}_6 \times \vec{r}_6 \end{bmatrix} =$$

$$= f_1 \underbrace{\begin{bmatrix} \vec{s}_1 \\ \vec{s}_1 \times \vec{r}_1 \end{bmatrix}}_{\hat{s}_1} + \dots + f_6 \underbrace{\begin{bmatrix} \vec{s}_6 \\ \vec{s}_6 \times \vec{r}_6 \end{bmatrix}}_{\hat{s}_6} =$$

$$= f_1 \hat{s}_1 + \dots + f_6 \hat{s}_6$$

where:

- $\vec{f}_i$ = force vector along leg i
- $\vec{s}_i$ = unit vector along leg i oriented from the base to the moving platform.
- f_i = signed magnitude of $\vec{f}_i$. I.e., $\vec{f}_i = f_i \cdot \vec{s}_i$.

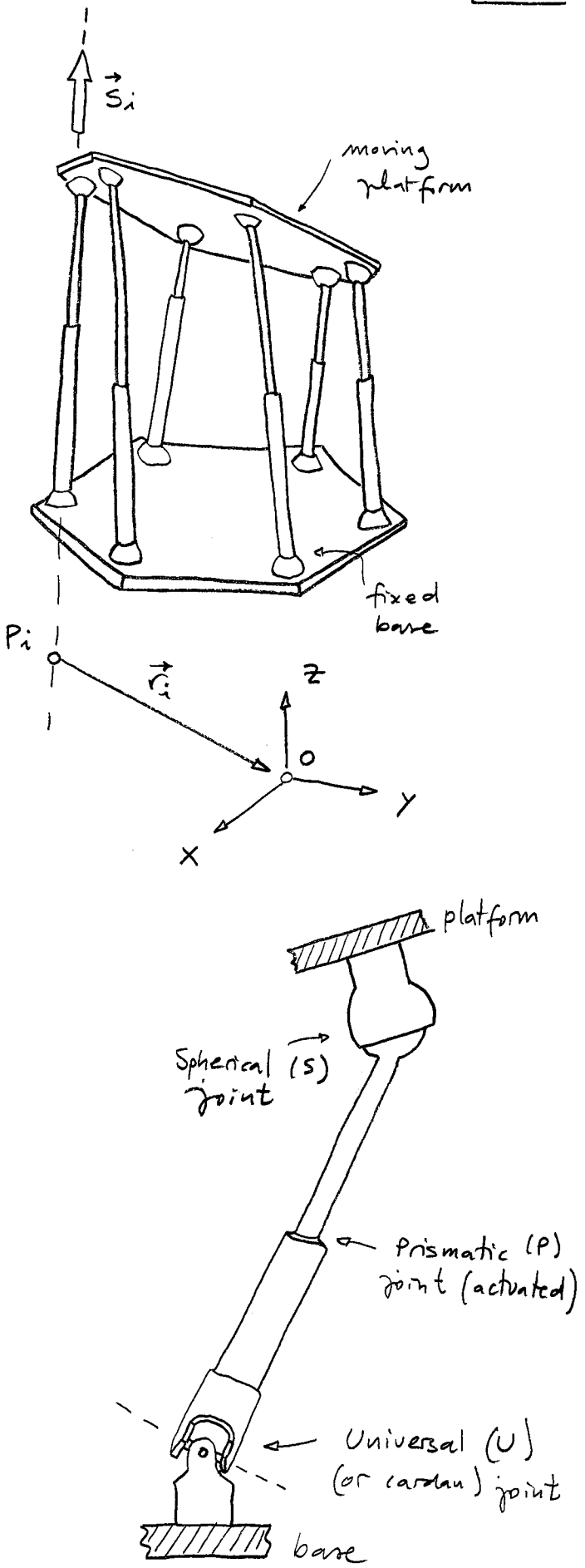

fig. c2. Top: The Stewart Platform
Bottom: UPS structure of a leg

The previous sum can be written in matrix form as follows

$$\hat{w} = \underbrace{\begin{bmatrix} \vec{s}_1 & & \vec{s}_6 \\ & \cdots & \\ \vec{s}_1 \times \vec{r}_1 & & \vec{s}_6 \times \vec{r}_6 \end{bmatrix}}_{j} \underbrace{\begin{bmatrix} f_1 \\ \vdots \\ f_6 \end{bmatrix}}_{\vec{\lambda}}$$

and hence we arrive at an analogous expression to that of the planar case:

$$\boxed{\hat{w} = j\,\vec{\lambda}}$$

where j is the so-called "force Jacobian" of the manipulator.

All developments of Modules 2 ("Statics") and 4 ("Duality") are equally valid for the Stewart platform. The only change is in the dimension of the vector spaces in which $\vec{\lambda}$ and $\vec{w}$ take values, which is now 6 instead of 3.

We note that the legs of the Stewart platform are "pure force generators". Each leg applies a zero-pitch wrench on the moving platform, without applying any couple. It is natural to ask whether it would be possible to construct a leg able to act as a "pure couple generator". It is indeed possible.

The CRPC leg depicted in this page provides one example, where the C joints are cylindrical joints

Note that by locking the R joint the platform can only equilibrate couples aligned with the Z direction. It cannot withstand forces along any of the X, Y, or Z directions.

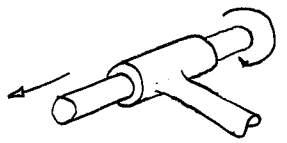

A cylindrical joint

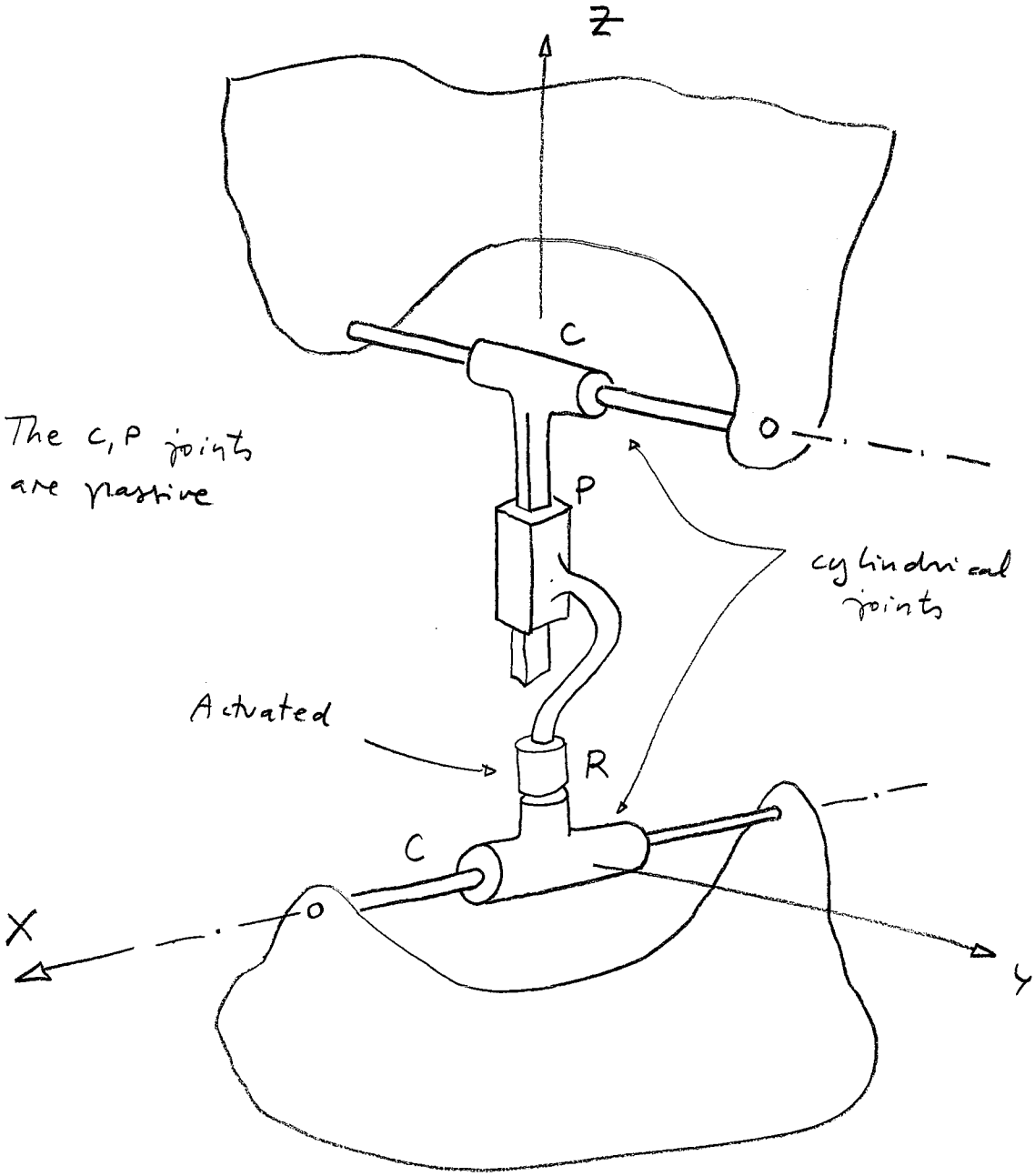

2.- KINEMATIC ANALYSIS OF SPATIAL SERIAL ROBOTS

Consider the general serial robot of fig. C3. The velocity field that each joint individualy generates on the end effector (assuming that the remaining joints are locked) can be represented by a zero- or an infinity-pitch wrench.

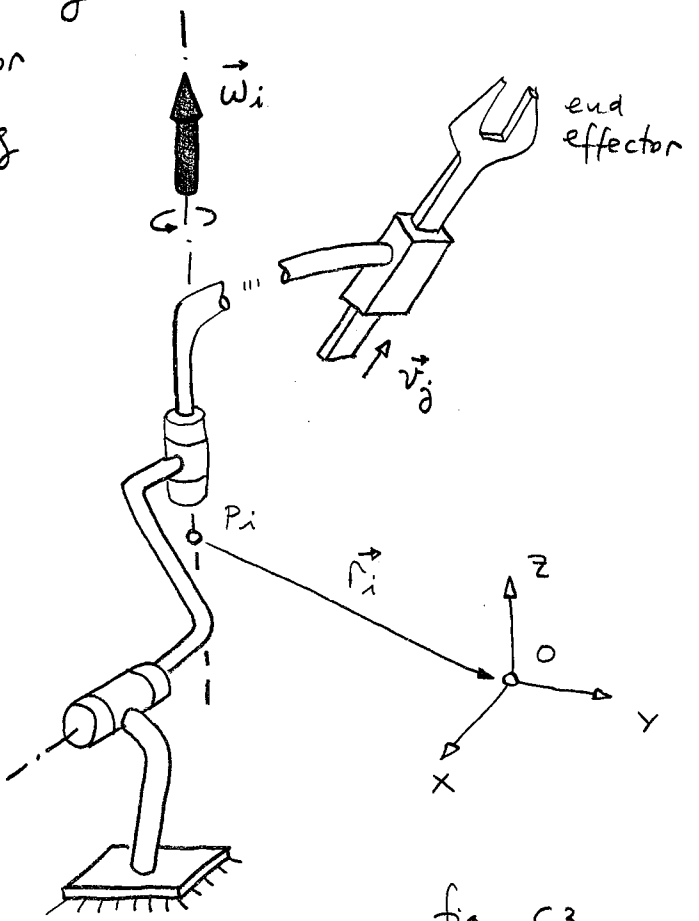

fig. C3

The twist corresponding to the i-th revolute joint is

$$\hat{\omega}_i = \begin{bmatrix} \vec{\omega}_i \\ \vec{\omega}_i \times \vec{r}_i \end{bmatrix} \qquad (h=0)$$

where $\vec{r}_i = \vec{P_i O}$, being P_i any point on the rotation axis of the joint

The twist of the j-th prismatic joint is

$$\hat{v}_j = \begin{bmatrix} 0 \\ \vec{v}_j \end{bmatrix} \qquad (h=\infty)$$

The process described in pages 40 and 41 to obtain the twist $\vec{t} = \begin{bmatrix} \vec{\omega} \\ \vec{v}_0 \end{bmatrix}$ of the end body relative to the OXYZ frame boils down to computing the sum

$$\hat{t} = \sum_{i=1}^{n} \hat{\omega}_i + \sum_{j=1}^{m} \hat{v}_j = \begin{bmatrix} \vec{\omega}_1 + \dots + \vec{\omega}_n \\ \vec{v}_1 + \dots + \vec{v}_m + \vec{v}_{0,1} + \dots + \vec{v}_{0,m} \end{bmatrix}$$

where

$$\vec{v}_{0,i} = \vec{\omega}_i \times \vec{r}_i .$$

The kinematic analysis of the general 6R robot gives rise to a particular case of the previous expression. If the serial chain in fig. C3 only contains revolute joints, and assuming $n=6$, we obtain

$$\hat{t} = \begin{bmatrix} \vec{\omega}_1 \\ \vec{\omega}_1 \times \vec{r}_1 \end{bmatrix} + \dots + \begin{bmatrix} \vec{\omega}_6 \\ \vec{\omega}_6 \times \vec{r}_6 \end{bmatrix}$$

or in matrix form:

$$\hat{t} = \begin{bmatrix} \vec{s}_1 & \dots & \vec{s}_6 \\ \vec{s}_1 \times \vec{r}_1 & \dots & \vec{s}_6 \times \vec{r}_6 \end{bmatrix} \begin{bmatrix} \omega_1 \\ \vdots \\ \omega_6 \end{bmatrix} \qquad (E)$$

where

$\vec{s}_i$ = unit vector along the axis of the i-th R joint

ω_i = signed magnitude of $\vec{\omega}_i$, such that $\vec{\omega}_i = \omega_i \vec{s}_i$

Eq. (E) can also be written with all screws involved in it written in axis coordinates, as follows

$$\hat{T} = \underbrace{\begin{bmatrix} \vec{s}_1 \times \vec{r}_1 & \dots & \vec{s}_6 \times \vec{r}_6 \\ \vec{s}_1 & \dots & \vec{s}_6 \end{bmatrix}}_{J} \underbrace{\begin{bmatrix} \omega_1 \\ \vdots \\ \omega_6 \end{bmatrix}}_{\vec{\gamma}},$$

where

$$\hat{T} = \begin{bmatrix} \vec{\omega} \\ \vec{v}_0 \end{bmatrix}.$$

The J matrix is called the kinematic jacobian of the

serial robot, and we now see that the obtained equation

$$\boxed{\hat{T} = J \cdot \vec{\gamma}}$$

is completely analogous to the one obtained for the serial 3R planar robot.

All developments of modules 3 ("Kinematics") and 4 ("Duality") relative to the 3R robot also apply to the spatial 6R robot. The only change is in the dimension of the vector spaces of $\vec{\gamma}$ and $\hat{T}$, which is now 6 instead of 3.

3.- ADDITIONAL RELATIONSHIPS USING VIRTUAL POWER

As done in Module 4 ("Duality") we can obtain the equations describing the kinematic behavior of the Stewart platform, and the static behavior of the serial robot, obtaining, respectively:

Kinematic equations of the Stewart platform

$$\vec{v} = j^T \hat{T}$$

j = force jacobian in ray coords

vector of leg velocities

$$\vec{v} = \begin{bmatrix} v_1 \\ \vdots \\ v_6 \end{bmatrix}$$

platform twist in axis coordinates

$$\hat{T} = \begin{bmatrix} \vec{v}_0 \\ \vec{\omega} \end{bmatrix}$$

J = kinematic jacobian in axis coordinates

Static equations of the spatial 6R robot

$$\vec{\tau} = J^T \hat{w}$$

vector of resultant joint torques

$$\vec{\tau} = \begin{bmatrix} \tau_1 \\ \vdots \\ \tau_6 \end{bmatrix}$$

End-effector wrench (applied by the environment on the platform) in ray coords:

$$\hat{w} = \begin{bmatrix} \vec{f} \\ \vec{c}_0 \end{bmatrix}$$

One can construct the same duality diagrams of Module 4, and infer the same consequences.