# Global Task Space Manipulability Ellipsoids for Multiple-Arm Systems

Pasquale Chiacchio, Stefano Chiaverini, Lorenzo Sciavicco, and Bruno Siciliano, *Member, IEEE*

*Abstract*—**New definitions of force and velocity manipulability ellipsoids for multiple-arm systems are given in this paper. A suitable kinetostatic formulation for multiple cooperating arms is adopted that allows a global task space description of external and internal forces as well as absolute and relative velocities at the object level. The well-known concept of a force manipulability ellipsoid for a single arm is formally extended to the multiarm case by regarding the whole system as a mechanical transformer from the extended joint space to the global task space. Kinetostatic duality properties are then conveniently exploited to derive velocity manipulability ellipsoids for the multiple-arm system. The proposed method is compared with other approaches via numerical examples.**

## I. Introduction

COOPERATIVE robot systems lately have been receiving increasing attention from the robotics research community. They are believed to offer enhanced capabilities over current single-arm structures. Nonetheless, this research field covers the interesting case of multifingered robot hands [1], in which the same kind of issues are encountered.[1] A cooperation strategy with two or more arms becomes necessary to perform all those tasks that cannot be easily executed by a single robot arm. Typical cooperation examples include tasks such as handling large, heavy, or nonrigid objects; assembly and mating mechanical parts; and space robotics applications.

In spite of the potential benefits achievable with multiple arms, the analysis and control problem becomes more complex due to the kinematic and dynamic interactions imposed by cooperation. This means that, in all those tasks requiring effective cooperation, one cannot straightforwardly extend the well-known results for the kinematics, dynamics, and control of a single arm. Therefore, for the solution of these problems, a global description of the kinetostatic and dynamic relationship for a multiarm system is needed.

Referring to the simple case of a two-arm system, two main approaches have been proposed in the current literature; namely, a master-slave (or leader-follower) strategy [2] and a task-space-oriented formulation [3]. The former consists in defining the desired motion for the leader arm based on the desired motion of the object to be manipulated, and deriving the motion for the follower arm accordingly to the set of holonomic constraints determined by the closed-chain system [2].

The latter strategy has been shown to be effective for coordinated control schemes with equal importance given to the two robots performing the given task [3]. A suitable set of global task space static coordinates is defined in terms of absolute generalized forces on the object and internal generalized forces between the two end-effectors. Based on the duality principle between kinematics and statics, global task space kinematic coordinates are derived that describe absolute velocities of the object and relative velocities between the two end-effectors. This formulation can be formally extended to the case of multiple-arm systems as is shown in this work. In particular, internal forces are defined at object level, which is different from [4] where they are represented at end-effector level.

In this scenario, an important issue is the definition of quantitative measures of the performance offered by multiarm cooperation.

The velocity and force manipulability ellipsoids introduced in [5] are widely adopted as kinetostatic performance indices for a single arm. These are not an absolute numerical measure of the robot system capability but rather are a measure of the kinetostatic capabilities of the mechanical system, which is independent of the physical force/velocity limitations; in other words, the ellipsoid does not give the maximum force/velocity along different task directions but only indicates the preferred directions for the structure to perform force/velocity in a given configuration. This method was revisited in [6] where the manipulator is effectively regarded as a mechanical transformer of velocities and forces from the joint space to the task space.

A dual-arm velocity manipulability ellipsoid is defined in [7] as the maximum volume ellipsoid determined by the intersection between the two single-arm velocity manipulability ellipsoids. The case of loose cooperation is also treated. Relative velocity and external plus internal force effects are not investigated, although they are important for the analysis of cooperation performance. Only the dual-arm case is addressed, and the extension to the multiarm case does not seem to be straightforward.

An alternative approach recently has been proposed in [8] based on the use of polytopes that properly account for the physical limits on the joint actuators. Although the method is technically correct, its practical application is limited due to the lack of a closed-form algorithm to derive the polytope in nontrivial cases.

Manuscript received July 7, 1989; revised January 29, 1991. This work was supported in part by the Ministero dell'Università e della Ricerca Scientifica e Tecnologica under 40% funds and in part by the Consiglio Nazionale delle Ricerche under Contract 90.00355.PF67.

The authors are with the Dipartimento di Informatica e Sistemistica, Università degli Studi di Napoli Federico II, Via Claudio 21, 80125 Naples, Italy.

IEEE Log Number 9101933.

[1] As a consequence, multiarm systems and multifingered robot hands can be regarded as synonymous in the rest of the paper.

1042-296X/91$01.00 

In this paper, formal definitions of force and velocity manipulability ellipsoids for multiple cooperative arms are established according to the above global task space formulation that regards the closed-chain system as a whole, i.e., at the object level and then independently from the number of arms involved in the cooperation. The present work is developed following the philosophy of [5] and [6] and is a generalization of previous work by the authors for dual-arm systems [9]. With regard to the previous approaches, for a given force/velocity task, we focus our attention on evaluating the attitude of the arms to cooperate rather than on computing the actual physical limits of the multiarm system. Further, an attractive feature of our approach is its simple and elegant formalism that leads to closed-form expressions to evaluate a cooperative robotic system's manipulability.

The following assumptions are made concerning the kinetostatic modeling of the cooperative system: *tight grasp* and *rigid object*, although it is conjectured that more complex kinds of cooperation can be treated in a similar fashion. External and internal force ellipsoids are derived according to the definition of global task space static coordinates; then absolute and relative velocity ellipsoids are derived on the basis of the duality concept. The results are compared with those obtained using the methods in [7] and [8] by means of simple numerical examples.

## II. Kinetostatics of a Multiarm System

In the following, the formulation of task space coordinates required for describing cooperative tasks is presented. The perspective here is to regard the multiple arms and the grasped object as *one integrated system* with respect to the degrees of freedom provided by the joints of each arm.

For the purpose of the present work, the assumptions of tight grasp and rigid object are made to derive the kinetostatic modeling of the multiarm system. The issue of grasp stability has been widely investigated in [10], where grasping under unisense and finite friction forces is considered; also, quality measures to guide the optimal grasp selection are derived from suitable task ellipsoids [11]. Other types of contact have been considered in the literature, e.g., sliding [12] and rolling [13], that lead to nonconstant grasp matrices. An elastic model of the object has been considered in [14], where the strain energy is minimized.

According to [3], the cooperative task can be described in terms of a set of absolute coordinates and a set of relative coordinates. The formulation is generalized here to the case of multiple arms. Fig. 1 illustrates a cooperative system with $K$ arms grasping an object. The static relationship between the generalized forces exerted by the multiple arms and the generalized forces acting on the object—external and internal—is presented first. The kinematic relationship will be derived by using the duality relation between forces and velocities. Let

$$\boldsymbol{h}_i = \begin{bmatrix} \boldsymbol{f}_i \\ \boldsymbol{\mu}_i \end{bmatrix} \quad \boldsymbol{h}_i \in \boldsymbol{R}^m, \qquad i = 1, \cdots, K \tag{1}$$

denote the vectors of generalized contact forces (forces $\boldsymbol{f}_i$ and moments $\boldsymbol{\mu}_i$) at the multiple end-effectors. The above

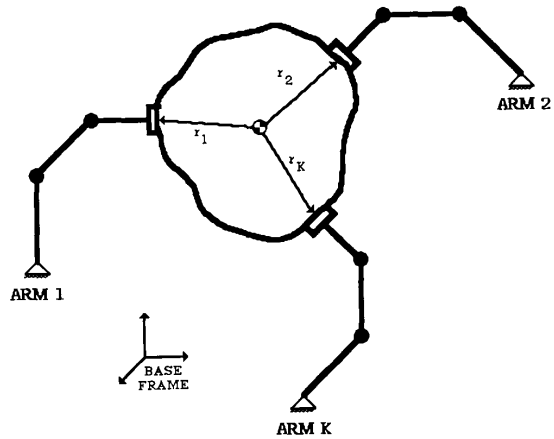


Fig. 1. A multiple cooperative arm system.

vectors can be compacted into

$$\boldsymbol{h} = \begin{bmatrix} \boldsymbol{h}_1 \\ \vdots \\ \boldsymbol{h}_K \end{bmatrix} \quad \boldsymbol{h} \in \boldsymbol{R}^M \tag{2}$$

where $M = Km$ is the dimension of the *contact space*, that is, the Cartesian product of the task spaces associated with each arm. Then let

$$\boldsymbol{h}_a = \begin{bmatrix} \boldsymbol{f}_a \\ \boldsymbol{\mu}_a \end{bmatrix} \qquad \boldsymbol{h}_a \in \boldsymbol{R}^m \tag{3}$$

denote the vector of *external forces* applied at the center of mass of the object—expressed in the base frame—described in the *global task space*. According to the assumption of rigid contact, it has been assumed that the vectors $\boldsymbol{h}_i$ in (1) all have the same dimension as that of the task space of interest, specified by $\boldsymbol{h}_a$ in (3). For instance, in the most general case of $m = 6$, it is implied that each arm has six degrees of freedom to ensure rigid contact. For other types of contact, e.g., sliding and rolling, the dimension of $\boldsymbol{h}_i$ is less than that of $\boldsymbol{h}_a$. It can be shown that the mapping from the contact space onto the global task space is described by

$$\boldsymbol{h}_a = \boldsymbol{W}\boldsymbol{h} \tag{4}$$

where $\boldsymbol{W} \in \boldsymbol{R}^{m \times M}$ is the so-called *grasp* matrix given by

$$\boldsymbol{W} = [\boldsymbol{W}_1 \cdots \boldsymbol{W}_K]. \tag{5}$$

The grasp submatrices $\boldsymbol{W}_i \in \boldsymbol{R}^{m \times m}$ are

$$\boldsymbol{W}_i = \begin{bmatrix} \boldsymbol{I} & \boldsymbol{O} \\ \boldsymbol{R}_i & \boldsymbol{I} \end{bmatrix}, \qquad i = 1, \cdots, K \tag{6}$$

where $\boldsymbol{I}$ and $\boldsymbol{O}$, respectively, denote identity and null matrices of appropriate dimensions, and $\boldsymbol{R}_i$ are the matrices performing the vector product $\boldsymbol{r}_i \times \boldsymbol{f}_i = \boldsymbol{R}_i \boldsymbol{f}_i$ with $\boldsymbol{r}_i$ illustrated in Fig. 1. All the above quantities are to be defined with respect to some reference frame, but this is inessential to the derivation. In the case of $m = 6$, it is

$$\boldsymbol{R}_i = \begin{bmatrix} 0 & -r_{iz} & r_{iy} \\ r_{iz} & 0 & -r_{ix} \\ -r_{iy} & r_{ix} & 0 \end{bmatrix}, \qquad i = 1, \cdots, K \tag{7}$$

where $r_{ix}$, $r_{iy}$, $r_{iz}$ are the components of $\boldsymbol{r}_i$ with respect to the reference frame chosen. Since $m < M$, it can easily be recognized that $\boldsymbol{W}$ possesses a nonempty null space $\mathcal{N}(\boldsymbol{W})$. As a consequence of this, some authors propose to invert (4) as

$$\boldsymbol{h} = \boldsymbol{W}^{\dagger}\boldsymbol{h}_a + [\boldsymbol{I} - \boldsymbol{W}^{\dagger}\boldsymbol{W}]\boldsymbol{h}_o \tag{8}$$

where $\boldsymbol{W}^{\dagger}$ is a left pseudoinverse of $\boldsymbol{W}$ and $\boldsymbol{h}_o \in \boldsymbol{R}^M$ is a vector of internal forces at the end-effectors level. Then several algorithms have been proposed that exploit $\boldsymbol{h}_o$ to find the optimal load distribution [4], [15], [16].

Conversely, according to the perspective of regarding the system as a whole, it is argued here that describing the internal forces at the object level would better reflect the natural way of assigning a task to a cooperative system. For instance, a desired internal "squeezing" force may be required in a certain direction; this is supplied by the integrated system rather than by regarding the arms alone. In order to accomplish this goal, the vector of independent internal forces is defined as $\boldsymbol{h}_r \in \boldsymbol{R}^{M-m}$. As a consequence, the solution to (4) can be rewritten as

$$\boldsymbol{h} = \boldsymbol{W}^{\dagger}\boldsymbol{h}_a + \boldsymbol{V}\boldsymbol{h}_r \tag{9}$$

where $\boldsymbol{V} \in \boldsymbol{R}^{M\times(M-m)}$ is a matrix whose range spans the null space of the grasp matrix, i.e., $\mathcal{R}(\boldsymbol{V}) \equiv \mathcal{N}(\boldsymbol{W})$. For example, for a three-arm system ($K = 3$) with a six-dimensional global task space ($m = 6$): $\boldsymbol{W}$ is a $(6 \times 18)$ matrix and $\boldsymbol{V}$ is a $(18 \times 12)$ matrix.

At this point, the choice of $\boldsymbol{V}$ is related to the physical characterization of the internal forces $\boldsymbol{h}_r$ of the system. The vector of independent internal forces $\boldsymbol{h}_r$ can be partitioned as

$$\boldsymbol{h}_r = \begin{bmatrix} \boldsymbol{h}_{r1} \\ \vdots \\ \boldsymbol{h}_{r,K-1} \end{bmatrix}, \qquad \boldsymbol{h}_{ri} \in \boldsymbol{R}^m. \tag{10}$$

A first possible choice for $\boldsymbol{V}$ is [17]

$$\boldsymbol{V} = \begin{bmatrix} \boldsymbol{V}_1 & \boldsymbol{O} & \cdots & \boldsymbol{O} \\ -\boldsymbol{V}_2 & \boldsymbol{V}_2 & \cdots & \boldsymbol{O} \\ \boldsymbol{O} & -\boldsymbol{V}_3 & \cdots & \boldsymbol{O} \\ \vdots & \vdots & \ddots & \vdots \\ \boldsymbol{O} & \boldsymbol{O} & \cdots & \boldsymbol{V}_{K-1} \\ \boldsymbol{O} & \boldsymbol{O} & \cdots & -\boldsymbol{V}_K \end{bmatrix} \tag{11}$$

where the submatrices $\boldsymbol{V}_i \in \boldsymbol{R}^{m\times m}$ are

$$\boldsymbol{V}_i = \begin{bmatrix} \boldsymbol{I} & \boldsymbol{O} \\ -\boldsymbol{R}_i & \boldsymbol{I} \end{bmatrix}, \qquad i = 1, \cdots, K. \tag{12}$$

This is equivalent to considering the internal forces $\boldsymbol{h}_{ri}$ between the pair of end-effectors $i$ and $i + 1$.

Another possible choice of $\boldsymbol{V}$ is proposed as

$$\boldsymbol{V} = \begin{bmatrix} -\boldsymbol{V}_1 & \boldsymbol{O} & \cdots & \boldsymbol{O} \\ \boldsymbol{O} & -\boldsymbol{V}_2 & \cdots & \boldsymbol{O} \\ \vdots & \vdots & \ddots & \vdots \\ \boldsymbol{O} & \boldsymbol{O} & \cdots & -\boldsymbol{V}_{K-1} \\ \boldsymbol{V}_K & \boldsymbol{V}_K & \cdots & \boldsymbol{V}_K \end{bmatrix} \tag{13}$$

which describes the internal forces between the $i$th end-effector and a suitable reference end-effector, which is taken here as the $K$th one without loss of generality. Notice that any choice of $\boldsymbol{V}$ that corresponds to a physical description of the internal forces can be made as long as it guarantees that $\boldsymbol{W}\boldsymbol{V} = \boldsymbol{O}$.

Once the static formulation has been established, the differential kinematic relationship can be derived in a similar manner. Let

$$\boldsymbol{v}_i = \begin{bmatrix} \dot{\boldsymbol{p}}_i \\ \boldsymbol{\omega}_i \end{bmatrix}, \qquad \boldsymbol{v}_i \in \boldsymbol{R}^m, \qquad i = 1, \cdots, K \tag{14}$$

denote the vectors of end-effector velocities (linear velocities $\dot{\boldsymbol{p}}_i$ and angular velocities $\boldsymbol{\omega}_i$), all expressed in the base frame. These can be compacted into

$$\boldsymbol{v} = \begin{bmatrix} \boldsymbol{v}_1 \\ \vdots \\ \boldsymbol{v}_K \end{bmatrix}, \qquad \boldsymbol{v} \in \boldsymbol{R}^M. \tag{15}$$

Then let

$$\boldsymbol{v}_a = \begin{bmatrix} \dot{\boldsymbol{p}}_a \\ \boldsymbol{\omega}_a \end{bmatrix}, \qquad \boldsymbol{v}_a \in \boldsymbol{R}^m \tag{16}$$

denote the vector of absolute velocities of the object. Analogous to the definition of internal forces, the vector of independent relative velocities $\boldsymbol{v}_r \in \boldsymbol{R}^{M-m}$ is defined as

$$\boldsymbol{v}_r = \begin{bmatrix} \boldsymbol{v}_{r1} \\ \vdots \\ \boldsymbol{v}_{r,K-1} \end{bmatrix}, \qquad \boldsymbol{v}_{ri} \in \boldsymbol{R}^m. \tag{17}$$

At this point, on the basis of the duality between forces and velocities that follows from the principle of virtual work in mechanics, it can be shown that

$$\begin{aligned} \boldsymbol{v}_a &= \boldsymbol{W}^{\dagger T}\boldsymbol{v} \\ \boldsymbol{v}_r &= \boldsymbol{V}^T\boldsymbol{v} \end{aligned} \tag{18}$$

with $\boldsymbol{W}$ as in (5) and $\boldsymbol{V}$ as in (11) or (13).

Notice that, from a practical standpoint, it is convenient to choose the reference frame attached at the object; this allows direct description of relative quantities, while a coordinate transformation may be required in order to express absolute quantities in a suitable base frame.

## III. Definition of Manipulability Ellipsoids

### A. Manipulability Ellipsoids for a Single Arm

The idea of measuring the manipulating ability of robotic mechanisms was first introduced in [5]. According to that concept, a force manipulability ellipsoid and a velocity manipulability ellipsoid can be defined for a single arm. Assume that an $n$-degree-of-freedom arm is given and an $m$-dimensional task space is of interest, usually with $n \geq m$. It is well known that

$$\boldsymbol{\tau} = \boldsymbol{J}^T(\boldsymbol{q})\boldsymbol{h} \tag{19}$$

represents the static relationship between the task force vector $\boldsymbol{h}$ and the joint torque vector $\boldsymbol{\tau}$ through the transpose of the Jacobian matrix $\boldsymbol{J}(\boldsymbol{q}) \in \boldsymbol{R}^{m\times n}$, with $\boldsymbol{q}$ denoting the joint

displacement vector. Dually,

$$v = J(q)\dot{q} \tag{20}$$

represents the kinematic relationship between the joint velocity vector $\dot{q}$ and the task velocity vector $v$ through the Jacobian matrix $J(q)$.

The preimage of the unit sphere in the joint torque space

$$\tau^T\tau = 1 \tag{21}$$

under the mapping (19) is given by

$$h^T\left[J(q)J^T(q)\right]h = 1 \tag{22}$$

which is called a *force manipulability ellipsoid*. Dually, the unit sphere in the joint velocity space

$$\dot{q}^T\dot{q} = 1 \tag{23}$$

maps into the task velocity space ellipsoid

$$v^T\left[J(q)J^T(q)\right]^{-1}v = 1 \tag{24}$$

which is called a *velocity manipulability ellipsoid*. Direct comparison of (22) with (24) indicates that the principal axes (eigenvectors) of the two ellipsoids coincide, while the lengths of the axes (reciprocals of the square roots of the corresponding eigenvalues) are inversely proportional. This inverse velocity/force relation is consistent with regarding the manipulator as a mechanical transformer. Conservation of energy dictates that amplification in velocity transmission must invariably be accompanied by reduction in force transmission and vice-versa [6]. This interpretation of manipulability ellipsoids is very useful to determine their optimal shapes to execute a given task.

### *B. Manipulability Ellipsoids for a Multiarm System*

In the following, the force and velocity ellipsoids defined in (22) and (24) are formally extended to a multiarm system by taking advantage of the global task space kinetostatic formulation given in Section III-A. Let $n_i$ be the number of degrees of freedom of the $i$th arm of the system, with $n_i \geq m$. The static mapping (19) can be generalized to a $K$-arm system by suitably redefining $h$ as in (2) and the quantities $q \in R^N$, $J \in R^{m\times N}$ and $\tau \in R^N$, respectively, as

$$q = \begin{bmatrix} q_1 \\ \vdots \\ q_K \end{bmatrix}, \qquad q_i \in R^{n_i} \tag{25}$$

$$J = \operatorname{diag}\left(J_1 \cdots J_K\right), \qquad J_i \in R^{m\times n_i} \tag{26}$$

$$\tau = \begin{bmatrix} \tau_1 \\ \vdots \\ \tau_K \end{bmatrix}, \qquad \tau_i \in R^{n_i} \tag{27}$$

where $N = \sum_{i=1}^{K} n_i$ is the dimension of an *extended joint space*. Dually, the kinematic mapping (20) holds by redefining $v$ as in (15).

Fig. 2 illustrates the kinetostatic mappings between the spaces introduced above, namely, the extended joint space, the contact space, and the global task space through the

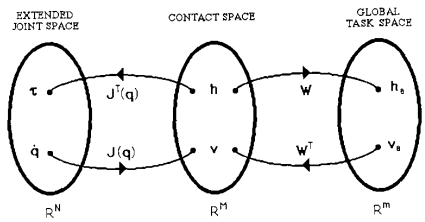


Fig. 2. Kinetostatic mappings for a multiarm system.

Jacobian matrix $J(q)$ and the grasp matrix $W$, respectively. Hereafter, the dependence of the Jacobians from $q$ will be omitted for notation compactness.

As emphasized in Section III-A, a manipulability ellipsoid describes the distribution of energy from the joint space to the task space. In the context of a cooperative arm system, we intend to define analogous manipulability ellipsoids that allow characterization of the system as a mechanical transformer of energy from the above-defined extended joint space to global task space. Therefore, taking the unit sphere in the extended joint torque (velocity) space corresponds to imposing a constant value of torque (velocity) norm for the overall system; if desired, relative weights on the individual actuators can be imposed by properly scaling the vector of joint torques (velocities) [5]. In sum, we affirm that reasoning in terms of the global energy of the system consents to analyze the goodness of the cooperation rather than the physical (force/velocity) limits thereof; this issue will be further enlightened in the following section where a comparison with other methods to describe the manipulability of a cooperative robot system is pursued.

In what follows, the effects of external (absolute) and internal (relative) forces (velocities) will be considered separately. Therefore, setting $h_r = 0$ in (9) yields

$$h = W^{\dagger}h_a \tag{28}$$

which, substituted in (19), gives

$$\tau = J_a^T h_a \tag{29}$$

where the matrix $J_a^T \in R^{N\times m}$ is defined as

$$J_a^T = J^T W^{\dagger}. \tag{30}$$

At this point, the preimage of the unit sphere in the extended joint torque space (21) under the mapping (29) is given by

$$h_a^T\left[J_a J_a^T\right]h_a = 1 \tag{31}$$

which is defined as the *external force manipulability ellipsoid* for the $K$-arm system.

Dually, the unit sphere in the extended joint velocity space (23) maps into

$$v_a^T\left[J_a J_a^T\right]^{-1}v_a = 1 \tag{32}$$

which is defined as the *absolute velocity manipulability ellipsoid* for the $K$-arm system.

To describe the internal force effects, one must consider

one pair of end-effectors at a time. Let then

$$(V)_j = \begin{bmatrix} \vdots \\ V_k \\ \vdots \\ -V_l \\ \vdots \end{bmatrix}, \qquad (V)_j \in R^{M\times m} \tag{33}$$

be the $j$th block column of a generic matrix $V$, $j = 1, \cdots, K-1$, where $V_k$ and $V_l$ denote the sole non-null submatrices of the kind defined in (12). Setting $h_a = 0$ and $h_{ri} = 0$, $i \neq j$ in (9) yields

$$h = (V)_j h_{rj} \tag{34}$$

where $h_{rj}$ are the internal forces between the $k$th and the $l$th end-effectors. Plugging (34) into (19) gives

$$\tau = (J_r^T)_j h_{rj} \tag{35}$$

where the matrix $(J_r^T)_j \in R^{N\times m}$ is defined as

$$(J_r^T)_j = J^T(V)_j. \tag{36}$$

Note that, by virtue of the definitions of (30) and (36) and of the structures of the matrices $W$ and $V$, we get

$$J_a^{T\dagger}(J_r^T)_j = O. \tag{37}$$

At this point, the preimage of the unit sphere in the joint torque space (21) under the mapping (35) is given by

$$h_{rj}^T\left[(J_r^T)_j^T(J_r^T)_j\right]h_{rj} = 1 \tag{38}$$

which is defined as the *internal force manipulability ellipsoid* for the $j$th pair of end-effectors.

As a consequence of the duality, the unit sphere in the joint velocity space (23) maps into

$$v_{rj}^T\left[(J_r^T)_j^T(J_r^T)_j\right]^{-1}v_{rj} = 1 \tag{39}$$

which is defined as the *relative velocity manipulability ellipsoid* for the $j$th pair of end-effectors.

## IV. Comparison with Other Approaches and Examples

In order to put the presented manipulability ellipsoids in the right perspective relative to other approaches, the essential features of each method are described below and a number of significant simple examples are developed.

In the literature, besides ours, two main approaches have been proposed to analyze the manipulability of a cooperative multiarm system: the task-oriented manipulability measure [7] and the polytopes [8].

In [8] convex polytopes are introduced to represent the realistic actuator force/velocity constraints in the joint space. The resulting polytopes in the task space allow the derivation of feasible forces/velocities. Once the polytope of each single arm is known, the polytope for the multiarm system is obtained via set and geometric operations. In particular, velocity polytopes intersect while force polytopes add; this naturally reflects the way velocities and forces are compounded. The limitation of using polytopes is that they cannot be derived via a closed-form analytic method.

In [7] the task-oriented manipulability measure is introduced to measure the closeness of an arm's instantaneous manipulability ellipsoid to the one needed for a given task. For a dual-arm system, the velocity manipulability ellipsoid is obtained as a suitable ellipsoid approximating the volume of intersection of the velocity manipulability ellipsoids of each arm taken individually. There are two major limitations of this method: only velocity manipulability ellipsoids can be derived, and the extension to multiple arms seems unfeasible in the light of possibly obtaining an ellipsoid that well approximates the volume of intersection. Compared with the polytope approach, the dual-arm velocity ellipsoid is, in general, not a good approximation to the dual-arm velocity polytope, despite the fact that the single-arm ellipsoids can be regarded as good approximations to the single-arm polytopes.

Both of the above methods are derived by composition of the manipulability (polytope or ellipsoid) of each single arm; this gives a measure of feasible forces/velocities achievable by a multiarm system but not a characterization of the arms' attitude to effectively cooperate in the execution of a given task. It is our opinion, in fact, that cooperation is not to be regarded as simple composition of individual contributions but as "balanced" participation of the arms to the cooperative task. In this respect, our approach is based on a global description of the cooperative system, and then an interpretation of the results obtained with our ellipsoids in terms of either of the above methods is somewhat fallacious. Moreover, we do not include at all the actual (possibly different) actuator limits since we are interested in analyzing the system as a mechanical transformer from the extended joint space to the global task space.

To understand the features of the three approaches, we consider the simplest system one could imagine, i.e., two arms, each with a single prismatic joint, hooked together with the joints colinear ($J_1 = J_2 = 1$). The unit sphere for arm 1 (or arm 2) is just the interval $[-1, 1]$; incidentally, the force ellipsoid and velocity ellipsoid of each arm are also just the interval $[-1, 1]$ and coincide with the force polytope and velocity polytope of each arm under the assumption of unit limits. Now when the arms are hooked together, we limit the joint forces (velocities) to a unit-radius disk as in (23). With the grasp matrix $W = [1 \;\; 1]$, we obtain, via (30), the interval $[-\sqrt{2}, \sqrt{2}]$ as the external force ellipsoid with a maximum task force of $\sqrt{2}$, and the interval $[-\sqrt{2}/2, \sqrt{2}/2]$ as the absolute velocity ellipsoid with a maximum task velocity of $\sqrt{2}/2$. Using polytopes, the external force polytope is the interval $[-2, 2]$ while the absolute velocity polytope is the interval $[-1, 1]$. In this particular case, the velocity manipulability ellipsoid proposed in [7] coincides with the absolute velocity polytope. A comparison of the results reveals that with our ellipsoid the total force is not the simple addition of the individual force limits as well as that the total velocity is not related to a limiting velocity. Obviously, we are not computing the force and velocity limits of the two-arm

system because we are viewing the system in terms of the linkage's global transformation of force and velocity.

We suppose now that the second arm has a transmission ratio of $\sqrt{3}$ ($J_2 = \sqrt{3}$): The resulting absolute velocity ellipsoid is the interval $[-1, 1]$, which by chance coincides with the absolute velocity polytope; what has happened? In this case, the presence of a ratio greater than one allows a lower joint velocity for the second arm to produce the same task velocity as that of the first arm. Thus, for a given constant value of the squared joint velocity of the two-arm system, as imposed by the constraint of (23), larger joint velocities can be reached by the first arm to match the velocity of the second arm; the maximum velocity is now $\sqrt{3}/2$, which is greater than in the previous case but still different from 1. We want to remark here, compared to the previous case, that $1 > \sqrt{2}/2$ means that the cooperation is enhanced in terms of our approach, but the number 1 is by no means representative of the maximum task velocity achievable; this continues to be 1 as obtained with the velocity polytope. Analogous considerations can be drawn for the external force ellipsoid.

As a further example, let us now combine the above two situations by considering two cooperating Cartesian manipulators whose Jacobians are

$$J_1 = \begin{bmatrix} 1 & 0 \\ 0 & 1 \end{bmatrix}$$

$$J_2 = \begin{bmatrix} 1 & 0 \\ 0 & \sqrt{3} \end{bmatrix}.$$

The grasp matrix is simply

$$W = \begin{bmatrix} 1 & 0 & 1 & 0 \\ 0 & 1 & 0 & 1 \end{bmatrix}.$$

Computing $J_a$ as in (30) gives

$$J_a J_a^T = \begin{bmatrix} 0.5 & 0 \\ 0 & 1 \end{bmatrix}$$

which corresponds to the ellipsoids drawn in Fig. 3(a).

Assuming again unit joint force (velocity) limits, the polytopes of the single arms and those of the two-arm system are depicted in Fig. 3(b). Then, Fig. 3(c) shows the velocity manipulability ellipsoid obtained as the intersection of the ellipsoids of the single arms. Notice that the obtained disk is a good approximation to the square of Fig. 3(b) but does not give any preferred direction. With the polytope the preferred direction is simply the diagonal of the square. Our absolute velocity ellipsoid instead indicates that the cooperation is more effective along the vertical direction than along the horizontal direction; this is explained by observing that the second arm needs a lower vertical joint velocity than the corresponding vertical joint velocity of the first one, as explained in the previous example. Dually, our external force ellipsoid shows that cooperation is more effective along the horizontal direction.

A final example is included to illustrate all of the kinds of manipulability ellipsoids presented in this work. Consider the cooperative system of two arms with two rotational joints each. In the configuration displayed in Fig. 4, the Jacobians

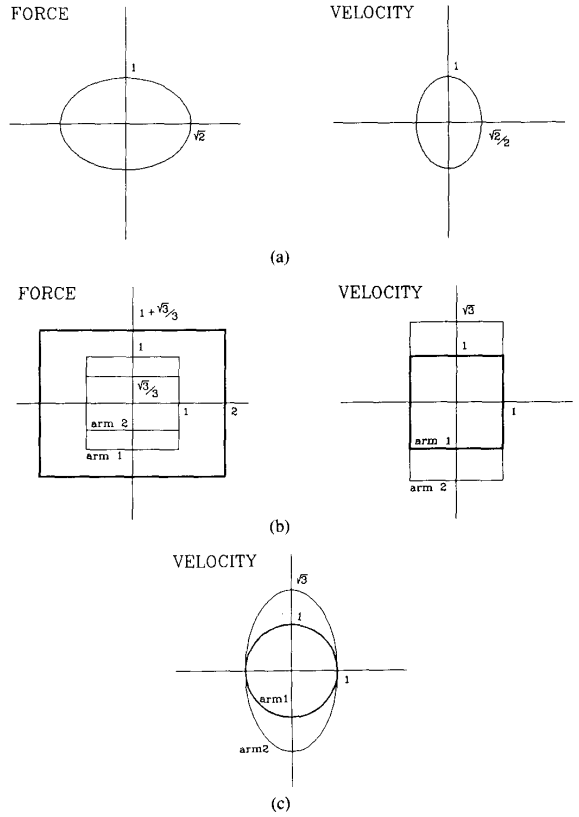


Fig. 3. Manipulability of two cooperating Cartesian arms: (a) external force and absolute velocity ellipsoids; (b) external force and absolute velocity polytopes; (c) velocity manipulability ellipsoid obtained as the intersection of the ellipsoids of the single arms.

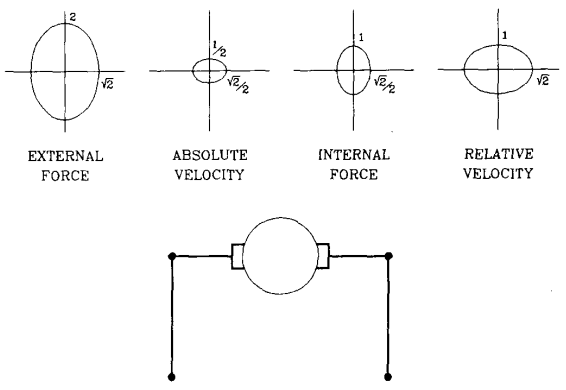


Fig. 4. Global task space manipulability ellipsoids for two cooperating revolute-joint arms.

are:

$$J_1 = \begin{bmatrix} -1 & 0 \\ 0.5 & 0.5 \end{bmatrix}$$

$$J_2 = \begin{bmatrix} -1 & 0 \\ -0.5 & -0.5 \end{bmatrix}.$$

The grasp matrix $W$ is the same as above. The resulting

external force and absolute velocity ellipsoids are reported in Fig. 4. With the choice

$$V = \begin{bmatrix} 1 & 0 \\ 0 & 1 \\ -1 & 0 \\ 0 & -1 \end{bmatrix}$$

the resulting internal force and relative velocity ellipsoids are also illustrated in Fig. 4. It can be recognized that, for the system in the given configuration, cooperation, in terms of both absolute and relative velocities, is better along the horizontal axis while in terms of external and internal forces, it is better along the vertical axis, as expected from duality.

## V. Conclusions

The concept of manipulability ellipsoids for single arms has formally been extended to the case of multiarm systems in order to investigate the arms' attitude to cooperate in a given system configuration. A global kinetostatic formulation of the closed chain created by multiple tightly cooperating arms has been exploited to define external and internal force manipulability ellipsoids. The corresponding absolute and relative velocity manipulability ellipsoids have been derived on the basis of the duality principle. The numerical examples have clarified the features of the proposed method as well as those of previously developed approaches.

The proposed manipulability ellipsoids can be conveniently utilized to determine optimal postures for redundant multiple-arm systems [18]. Furthermore, the formulation adopted in this work allows the derivation of a dynamic manipulability ellipsoid [19]. Analysis of different types of contact and object models will constitute the subject of further investigation.

## Acknowledgment

The authors would like to thank the anonymous Technical Editor and Reviewers for helpful and constructive comments on a previous version of this paper.

## References

[1] J. K. Salisbury and J. J. Craig, "Articulated hands: Force control and kinematic issues," *Int. J. Robotics Res.*, vol. 1, no. 1, pp. 4-17, 1982.

[2] J. Y. S. Luh and Y. F. Zheng, "Constrained relations between two coordinated industrial robots for motion control," *Int. J. Robotics Res.*, vol. 6, no. 3, pp. 60-70, 1987.

[3] P. Dauchez and M. Uchiyama, "Kinematic formulation for two force-controlled cooperating robots," in *Proc. 3rd Int. Conf. Advanced Robotics* (Versailles, France), Oct. 1987, pp. 457-467.

[4] Y. Nakamura, K. Nagai, and T. Yoshikawa, "Mechanics of coordinative manipulation by multiple robotic mechanisms," in *Proc. 1987 IEEE Int. Conf. Robotics Automat.* (Raleigh, NC), Mar.-Apr. 1987, pp. 991-998.

[5] T. Yoshikawa, "Manipulability of robotic mechanisms," *Int. J. Robotics Res.*, vol. 4, no. 1, pp. 3-9, 1985.

[6] S. Chiu, "Task compatibility of manipulator postures," *Int. J. Robotics Res.*, vol. 7, no. 5, pp. 13-21, 1988.

[7] S. Lee, "Dual redundant arm configuration optimization with task-oriented dual arm manipulability," *IEEE Trans. Robotics Automat.*, vol. 5, no. 1, pp. 78-97, 1989.

[8] T. Kokkinis and B. Paden, "Kinetostatic performance limits of cooperating robot manipulators using force-velocity polytopes," in *Proc. ASME Winter Annual Meeting—Robotics Res.* (San Francisco), Nov. 1989.

[9] P. Chiacchio, S. Chiaverini, L. Sciavicco, and B. Siciliano, "On the manipulability of dual cooperative robots," in *Proc. NASA Conf. Space Telerobotics* (Pasadena, CA), Jan.-Feb. 1989, pp. 351-360.

[10] Z. Li and S. S. Sastry, "Task-oriented optimal grasping by multifingered robot hands," *IEEE J. Robotics Automat.*, vol. 4, no. 1, pp. 32-44, 1988.

[11] Z. Li, P. Hsu, and S. Sastry, "Grasping and coordinated manipulation by a multifingered hand," *Int. J. Robotics Res.*, vol. 8, no. 4, pp. 33-50, 1989.

[12] A. Cole, P. Hsu, and S. Sastry, "Dynamic regrasping by coordinated control of sliding for a multifingered hand," in *Proc. 1989 IEEE Int. Conf. Robotics Automat.* (Scottsdale, AZ), May 1989, pp. 781-786.

[13] A. B. A. Cole, J. E. Hauser, and S. S. Sastry, "Kinematics and control of multifingered hands with rolling contact," *IEEE Trans. Automat. Contr.*, vol. 34, no. 4, pp. 398-404, 1989.

[14] Y. Nakamura, "Minimizing object strain energy for coordination of multiple robotic mechanisms," in *Proc. 1988 Amer. Control Conf.* (Atlanta, GA), June 1988, pp. 499-504.

[15] I. D. Walker, S. I. Marcus, and R. A. Freeman, "Distribution of dynamic loads for multiple cooperating robot manipulators," *J. Robotic Syst.*, vol. 6, no. 1, pp. 35-47, 1989.

[16] K. Kreutz and A. Lokshin, "Load balancing and closed chain multiple arm control," in *Proc. 1988 Amer. Control Conf.* (Atlanta, GA), June 1988, pp. 2148-2155.

[17] I. D. Walker, R. A. Freeman, and S. I. Marcus, "Multiple cooperating manipulators: The case of kinematically redundant arms," in *Proc. NASA Conf. Space Telerobotics* (Pasadena, CA), Jan.-Feb. 1989, pp. 15-24.

[18] P. Chiacchio, S. Chiaverini, and B. Siciliano, "Dexterous reconfiguration of a two-arm robot system," in *Proc. IEE Int. Conf. Control* (Edinburgh, UK), Mar. 1991, pp. 347-351.

[19] P. Chiacchio, S. Chiaverini, L. Sciavicco, and B. Siciliano, "Task-space dynamic analysis of multi-arm system configurations," *Int. J. Robotics Res.*, vol. 10, no. 6, 1991.

**Pasquale Chiacchio** was born in Naples, Italy, on September 7, 1963. He received the Laurea degree in electronic engineering from the University of Naples in 1987. He is working toward the Research Doctorate degree in electronic engineering at the Department of Computer and Systems Science of the University of Naples. His research interests include manipulator inverse kinematics techniques, optimal control of redundant manipulators and cooperative robot manipulation.

**Stefano Chiaverini** was born in Naples, Italy, on December 5, 1961. He received the Laurea and the Research Doctorate degrees in electronic engineering from the University of Naples in 1986 and 1990, respectively.

Since 1987, he has been working at the Department of Computer and Systems Science where he is currently a Research Associate. From January to June 1989 he was a Visiting Scholar at the Robotics Laboratory of the German Aerospace Research Establishment (DLR) in Oberpfaffenhofen, Germany, under a NATO research fellowship. His research interests include

manipulator inverse kinematics techniques, redundant manipulator control, cooperative robot manipulation and force/position control of manipulators.

**Lorenzo Sciavicco** was born in Rome, Italy, on December 8, 1938. He received the Laurea degree in electronic engineering from the University of Rome in 1963.

Since 1970, he has been working at the Department of Computer and Systems Science at the University of Naples where he is currently Professor of Automatic Control. His research interests include automatic control theory and applications, manipulator inverse kinematics techniques, redundant manipulator control, cooperative robot manipulation and force/position control of manipulators.

**Bruno Siciliano** (M'91) was born in Naples, Italy, on October 27, 1959. He received the Laurea and the Research Doctorate degrees in electronic engineering from the University of Naples in 1982 and 1987, respectively.

Since 1983, he has been working at the Department of Computer and Systems Science where he is currently a Research Associate. From Fall 1985 to Spring 1986 he was a Visiting Scholar at the School of Mechanical Engineering of the Georgia Institute of Technology, Atlanta, under a NATO research fellowship. His research interests include manipulator inverse kinematics techniques, modeling and control of lightweight flexible arms, redundant manipulator control, cooperative robot manipulation, force/position control of manipulators and output feedback control of two-time scale systems.

Dr. Siciliano is a Technical Editor of the IEEE TRANSACTIONS ON ROBOTICS AND AUTOMATION.